Honeywell | Honeywell Sensing and Productivity Solutions

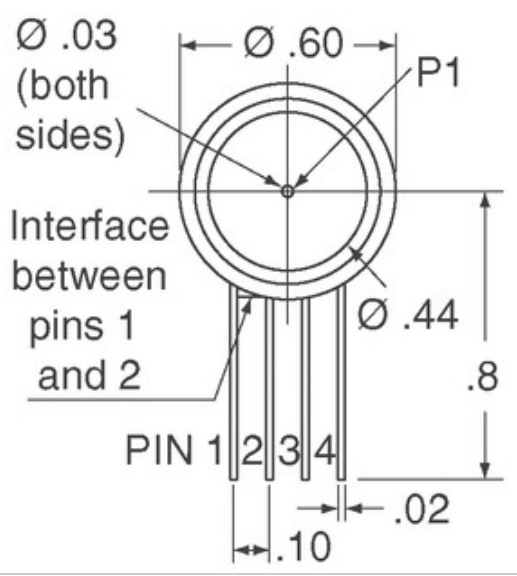

Image may be representation. See specifications for product details.

XPXL10DT

Part Number:	XPXL10DT
Manufacturer/Brand:	Honeywell Sensing and Productivity Solutions
Product description	SENSOR PRESS DIFF 10" H2O 4SIP
Datasheets:	1.XPXL10DT.pdf 2.XPXL10DT.pdf
RoHs Status	Lead free / RoHS Compliant
Stock Condition	5879 pcs stock
Ship From	Hong Kong
Shipment Way	DHL/Fedex/TNT/UPS/EMS

REQUEST FOR QUOTATION

Specifications of XPXL10DT

PART NUMBER	XPXL10DT
MANUFACTURER	Honeywell Sensing and Productivity Solutions
DESCRIPTION	SENSOR PRESS DIFF 10" H2O 4SIP
LEAD FREE STATUS / ROHS STATUS	Lead free / RoHS Compliant
QUANTITY AVAILABLE	5879 pcs
DATA SHEET	1.XPXL10DT.pdf 2.XPXL10DT.pdf
VOLTAGE - SUPPLY	3 V ~ 12 V
SUPPLIER DEVICE PACKAGE	-
SERIES	XPXL
PRESSURE TYPE	Differential
PORT STYLE	Barbed
PORT SIZE	Male - 0.19" (4.83mm) Tube, Dual
PACKAGE / CASE	4-SIP Module
OUTPUT TYPE	Wheatstone Bridge
OUTPUT	0 mV ~ 78.5 mV (5V)
OPERATING TEMPERATURE	-25°C ~ 85°C
OPERATING PRESSURE	0.36 PSI (2.49 kPa)
MOISTURE SENSITIVITY LEVEL (MSL)	1 (Unlimited)
MAXIMUM PRESSURE	3 PSI (20.68 kPa)
LEAD FREE STATUS / ROHS STATUS	Lead free / RoHS Compliant
FEATURES	-
DETAILED DESCRIPTION	Pressure Sensor 0.36 PSI (2.49 kPa) Differential Male - 0.19" (4.83mm) Tube, Dual 0 mV ~ 78.5 mV (5V) 4-SIP Module
ACCURACY	±1%

Related Tags

Honeywell Sensing and Productivity Solutions XPXL10DT	XPXL10DT Distributor	XPXL10DT Supplier
XPXL10DT Price	XPXL10DT Pictures	XPXL10DT Image
XPXL10DT PDF Datasheet	XPXL10DT Download Datasheet	XPXL10DT Datasheet
XPXL10DT Stock	Buy XPXL10DT	Buy Honeywell Sensing and Productivity Solutions XPXL10DT
Honeywell Sensing and Productivity Solutions XPXL10DT	Honeywell Sensing and Productivity Solutions Supplier	Honeywell Sensing and Productivity Solutions Distributor
Honeywell Sensing and Productivity Solutions XPXL10DT	HONEYWELL XPXL10DT	Honeywell Sensing and Control EMEA XPXL10DT
Honeywell Sensing and Productivity Solutions T&M XPXL10DT		

Related Products

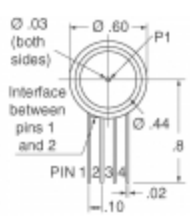

XPX15GFS
Manufacturers: Honeywell Sensing and Productivity Solutions
Description: XPX GAUGE VACUUM GAUGE SIGNAL
In stock: 4872 pcs
RFQ

P51-2000-S-W-MD-5V-000-000
Manufacturers: SSI Technologies, Inc.
Description: SENSOR 2000PSIS 1/8 NPT 5V MINI
In stock: 497 pcs
RFQ

P51-1500-A-Z-M12-4.5OVP-000-000
Manufacturers: SSI Technologies, Inc.
Description: SENSOR 1500PSI 1/4-18NPT .5-4.5V
In stock: 438 pcs
RFQ

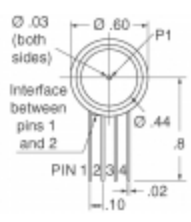

XPX100D
Manufacturers: Honeywell Sensing and Productivity Solutions
Description: XPX DIFF GAUGE VACCUM GAUGE
In stock: 6774 pcs
RFQ

XPX01D
Manufacturers: Honeywell Sensing and Productivity Solutions
Description: SENSOR DIFF VACUUM GAUGE 1PSI
In stock: 3519 pcs
RFQ

XPX100GFS
Manufacturers: Honeywell Sensing and Productivity Solutions
Description: SENSOR VACUUM GAUGE 100PSI
In stock: 6423 pcs
RFQ

XPX100DT
Manufacturers: Honeywell Sensing and Productivity Solutions
Description: SENSOR DIFF VACUUM GAUGE 100PSI
In stock: 3021 pcs
RFQ

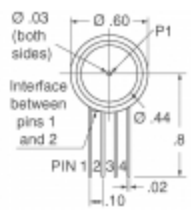

XPX15DT
Manufacturers: Honeywell Sensing and Productivity Solutions
Description: XPX DIFF GAUGE VACCUM GAUGE
In stock: 5336 pcs
RFQ

P51-15-S-H-I36-4.5V-000-000
Manufacturers: SSI Technologies, Inc.
Description: SENSOR 15PSI M12-1.5 6G .5-4.5V
In stock: 733 pcs
RFQ

P51-3000-S-F-P-4.5V-000-000
Manufacturers: SSI Technologies, Inc.
Description: SENSOR 3000PSI 1/4-18NPT .5-4.5V
In stock: 666 pcs
RFQ

XPX150D
Manufacturers: Honeywell Sensing and Productivity Solutions
Description: SENSOR DIFF VACUUM GAUGE 150PSI
In stock: 2829 pcs
RFQ

XPX30DT
Manufacturers: Honeywell Sensing and Productivity Solutions
Description: XPX DIFF GAUGE VACCUM GAUGE
In stock: 4450 pcs
RFQ

Copyright © 2020 Reliable Distributor of Electronic Components

E-mail: Info@infinity-electronic.com
Address: 17F, Gaylord Commercial Building, 114-118 Lockhart Road, Wan Chai, Hong Kong