Honeywell | Honeywell Sensing and Productivity Solutions

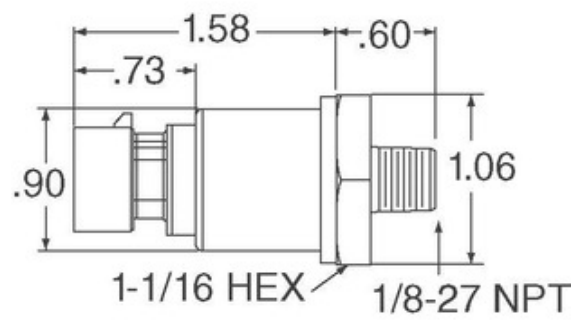

Image may be representation. See specifications for product details.

MLH500PSD13B

Part Number:	MLH500PSD13B
Manufacturer/Brand:	Honeywell Sensing and Productivity Solutions
Product description	MLH ALL METAL PRESS SENSE -ATF
Datasheets:	1.MLH500PSD13B.pdf 2.MLH500PSD13B.pdf
RoHs Status	Lead free / RoHS Compliant
Stock Condition	1028 pcs stock
Ship From	Hong Kong
Shipment Way	DHL/Fedex/TNT/UPS/EMS

REQUEST FOR QUOTATION

Specifications of MLH500PSD13B

PART NUMBER	MLH500PSD13B
MANUFACTURER	Honeywell Sensing and Productivity Solutions
DESCRIPTION	MLH ALL METAL PRESS SENSE -ATF
LEAD FREE STATUS / ROHS STATUS	Lead free / RoHS Compliant
QUANTITY AVAILABLE	1028 pcs
DATA SHEET	1.MLH500PSD13B.pdf 2.MLH500PSD13B.pdf
VOLTAGE - SUPPLY	9.5 V ~ 30 V
SUPPLIER DEVICE PACKAGE	-
SERIES	MLH
PRESSURE TYPE	Sealed Gauge
PORT STYLE	Threaded
PORT SIZE	Male - 1/4" (6.35mm) BSPT
PACKAGE / CASE	Cylinder, Metal
OUTPUT TYPE	Analog Current
OUTPUT	4 mA ~ 20 mA
OPERATING TEMPERATURE	-40°C ~ 125°C
OPERATING PRESSURE	500 PSI (3447.38 kPa)
MOISTURE SENSITIVITY LEVEL (MSL)	1 (Unlimited)
MAXIMUM PRESSURE	1500 PSI (10342.14 kPa)
LEAD FREE STATUS / ROHS STATUS	Lead free / RoHS Compliant
FEATURES	Amplified Output, Temperature Compensated
DETAILED DESCRIPTION	Pressure Sensor 500 PSI (3447.38 kPa) Sealed Gauge Male - 1/4" (6.35mm) BSPT 4 mA ~ 20 mA Cylinder, Metal
ACCURACY	±0.25%

Related Tags

- Honeywell Sensing and Productivity Solutions MLH500PSD13B
- MLH500PSD13B Distributor
- MLH500PSD13B Supplier
- MLH500PSD13B Price
- MLH500PSD13B Pictures
- MLH500PSD13B Image
- MLH500PSD13B PDF Datasheet
- MLH500PSD13B Download Datasheet
- MLH500PSD13B Datasheet
- MLH500PSD13B Stock
- Buy MLH500PSD13B
- Buy Honeywell Sensing and Productivity Solutions MLH500PSD13B
- Honeywell Sensing and Productivity Solutions MLH500PSD13B
- Honeywell Sensing and Productivity Solutions Supplier
- Honeywell Sensing and Productivity Solutions Distributor
- Honeywell Sensing and Productivity Solutions MLH500PSD13B
- HONEYWELL MLH500PSD13B
- Honeywell Sensing and Control EMEA MLH500PSD13B
- Honeywell Sensing and Productivity Solutions T&M MLH500PSD13B

Related Products

MLH500PSL06A
Manufacturers: Honeywell Sensing and Productivity Solutions
Description: SENSOR AMP 500PSI .5-4.5VDC OUT
In stock: 847 pcs
RFQ

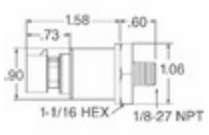

MLH500PSG01B
Manufacturers: Honeywell Sensing and Productivity Solutions
Description: SENSOR AMP 500PSIS 4-20MA OUT
In stock: 1034 pcs
RFQ

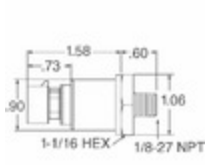

MLH500PSD09C
Manufacturers: Honeywell Sensing and Productivity Solutions
Description: SENSOR SEALED GAUGE 0-500 PSI
In stock: 5830 pcs
RFQ

MLH500PSB09C
Manufacturers: Honeywell Sensing and Productivity Solutions
Description: SENSOR AMP 500PSI 1-6VDC OUT
In stock: 723 pcs
RFQ

MLH500PSB06A
Manufacturers: Honeywell Sensing and Productivity Solutions
Description: SENSOR AMP 500PSI .5-4.5VDC OUT
In stock: 906 pcs
RFQ

MLH500PSL09B
Manufacturers: Honeywell Sensing and Productivity Solutions
Description: SENSOR AMP 500PSI 4-20MA OUT
In stock: 6094 pcs
RFQ

MLH500PSL01A
Manufacturers: Honeywell Sensing and Productivity Solutions
Description: SENSOR AMP 500PSI .5-4.5VDC OUT
In stock: 873 pcs
RFQ

MLH500PSB09A
Manufacturers: Honeywell Sensing and Productivity Solutions
Description: SENSOR AMP 500PSI .5-4.5VDC OUT
In stock: 870 pcs
RFQ

MLH500PSB06B
Manufacturers: Honeywell Sensing and Productivity Solutions
Description: SENSOR AMP 500PSI 4-20MA OUT
In stock: 852 pcs
RFQ

MLH500PSL09A
Manufacturers: Honeywell Sensing and Productivity Solutions
Description: SENSOR AMP 500PSI .5-4.5VDC OUT
In stock: 6426 pcs
RFQ

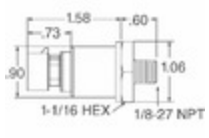

MLH500PSD01B
Manufacturers: Honeywell Sensing and Productivity Solutions
Description: MLH ALL METAL PRESS SENSE -ATF
In stock: 5955 pcs
RFQ

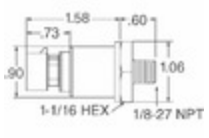

MLH500PSG06C
Manufacturers: Honeywell Sensing and Productivity Solutions
Description: SENSOR SEALED GAUGE 0-500 PSI
In stock: 4555 pcs
RFQ

Copyright © 2020 Reliable Distributor of Electronic Components

E-mail: Info@infinity-electronic.com
Address: 17F, Gaylord Commercial Building, 114-118 Lockhart Road, Wan Chai, Hong Kong