Honeywell | Honeywell Sensing and Productivity Solutions

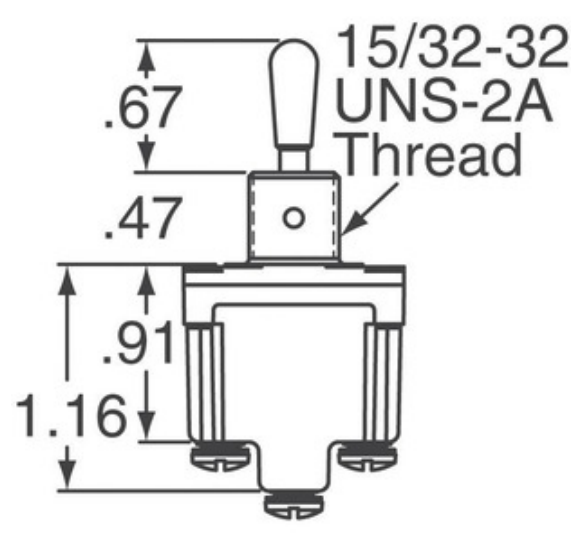

Image may be representation. See specifications for product details.

1NT1-1P

Part Number:	1NT1-1P
Manufacturer/Brand:	Honeywell Sensing and Productivity Solutions
Product description	SWITCH TOGGLE SPDT 15A 125V
Datasheets:	1.1NT1-1P.pdf 2.1NT1-1P.pdf 3.1NT1-1P.pdf
RoHs Status	Lead free / RoHS Compliant
Stock Condition	4441 pcs stock
Ship From	Hong Kong
Shipment Way	DHL/Fedex/TNT/UPS/EMS

REQUEST FOR QUOTATION

Specifications of 1NT1-1P

PART NUMBER	1NT1-1P
MANUFACTURER	Honeywell Sensing and Productivity Solutions
DESCRIPTION	SWITCH TOGGLE SPDT 15A 125V
LEAD FREE STATUS / ROHS STATUS	Lead free / RoHS Compliant
QUANTITY AVAILABLE	4441 pcs
DATA SHEET	1.1NT1-1P.pdf 2.1NT1-1P.pdf 3.1NT1-1P.pdf
VOLTAGE RATING - AC	125V
TERMINATION STYLE	Screw Terminal
SWITCH FUNCTION	On-Off-On
SERIES	NT
PANEL CUTOUT DIMENSIONS	Circular - 12.40mm Dia
PACKAGING	Bulk
OPERATING TEMPERATURE	-40°C ~ 71°C
MOUNTING TYPE	Panel Mount
MOISTURE SENSITIVITY LEVEL (MSL)	1 (Unlimited)
LEAD FREE STATUS / ROHS STATUS	Lead free / RoHS Compliant
INGRESS PROTECTION	IP67/68 - Dust Tight, Waterproof
ILLUMINATION VOLTAGE (NOMINAL)	-
ILLUMINATION TYPE, COLOR	-
ILLUMINATION	Non-Illuminated
FEATURES	Sealed
ELECTRICAL LIFE	-
DETAILED DESCRIPTION	Toggle Switch SPDT Panel Mount
CURRENT RATING	15A (AC)
CIRCUIT	SPDT
BUSHING THREAD	15/32-32
ACTUATOR TYPE	Locking Lever
ACTUATOR MATERIAL	-
ACTUATOR LENGTH	26.67mm

Related Tags

Honeywell Sensing and Productivity Solutions 1NT1-1P	1NT1-1P Distributor	1NT1-1P Supplier
1NT1-1P Price	1NT1-1P Pictures	1NT1-1P Image
1NT1-1P PDF Datasheet	1NT1-1P Download Datasheet	1NT1-1P Datasheet
1NT1-1P Stock	Buy 1NT1-1P	Buy Honeywell Sensing and Productivity Solutions 1NT1-1P
Honeywell Sensing and Productivity Solutions 1NT1-1P	Honeywell Sensing and Productivity Solutions Supplier	Honeywell Sensing and Productivity Solutions Distributor
Honeywell Sensing and Productivity Solutions 1NT1-1P	HONEYWELL 1NT1-1P	Honeywell Sensing and Control EMEA 1NT1-1P
Honeywell Sensing and Productivity Solutions T&M 1NT1-1P		

Related Products

1NT1-3
Manufacturers: Honeywell Sensing and Productivity Solutions
Description: SWITCH TOGGLE SPDT 15A 125V
In stock: 6168 pcs
RFQ

1NT1-2D
Manufacturers: Honeywell Sensing and Productivity Solutions
Description: SWITCH TOGGLE SPST 15A 125V
In stock: 2661 pcs
RFQ

1NT1-2G
Manufacturers: Honeywell Sensing and Productivity Solutions
Description: SWITCH TOGGLE SPST 15A 125V
In stock: 3614 pcs
RFQ

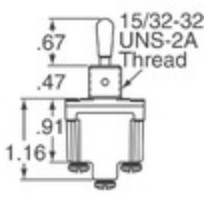

1NT1-21
Manufacturers: Honeywell Sensing and Productivity Solutions
Description: SWITCH TOGGLE SPST 15A 125V
In stock: 6458 pcs
RFQ

1NT1-2
Manufacturers: Honeywell Sensing and Productivity Solutions
Description: SWITCH TOGGLE SPST 15A 125V
In stock: 6117 pcs
RFQ

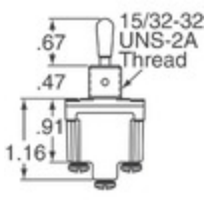

1NT1-1L
Manufacturers: Honeywell Sensing and Productivity Solutions
Description: SWITCH TOGGLE SPDT 15A 125V
In stock: 3237 pcs
RFQ

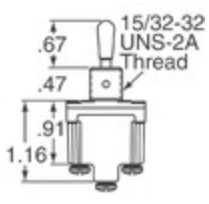

1NT1-1N
Manufacturers: Honeywell Sensing and Productivity Solutions
Description: SWITCH TOGGLE SPDT 15A 125V
In stock: 2912 pcs
RFQ

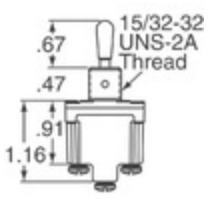

1NT1-1-NH
Manufacturers: Honeywell Sensing and Productivity Solutions
Description: SWITCH TOGGLE SPDT 15A 125V
In stock: 5484 pcs
RFQ

1NT01L-7953
Manufacturers: Sensata Technologies
Description: THERMOSTAT SPST-NC 180C 9A 250QC
In stock: 28200 pcs
RFQ

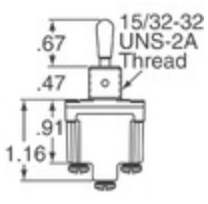

1NT1-2F
Manufacturers: Honeywell Sensing and Productivity Solutions
Description: SWITCH TOGGLE SPST 15A 125V
In stock: 4639 pcs
RFQ

1NT1-1
Manufacturers: Honeywell Sensing and Productivity Solutions
Description: SWITCH TOGGLE SPDT 15A 125V
In stock: 4912 pcs
RFQ

1NT1-1A
Manufacturers: Honeywell Sensing and Productivity Solutions
Description: SWITCH TOGGLE SPDT 15A 125V
In stock: 2776 pcs
RFQ

Copyright © 2020 Reliable Distributor of Electronic Components

E-mail: Info@infinity-electronic.com
Address: 17F, Gaylord Commercial Building, 114-118 Lockhart Road, Wan Chai, Hong Kong