Panasonic | Panasonic

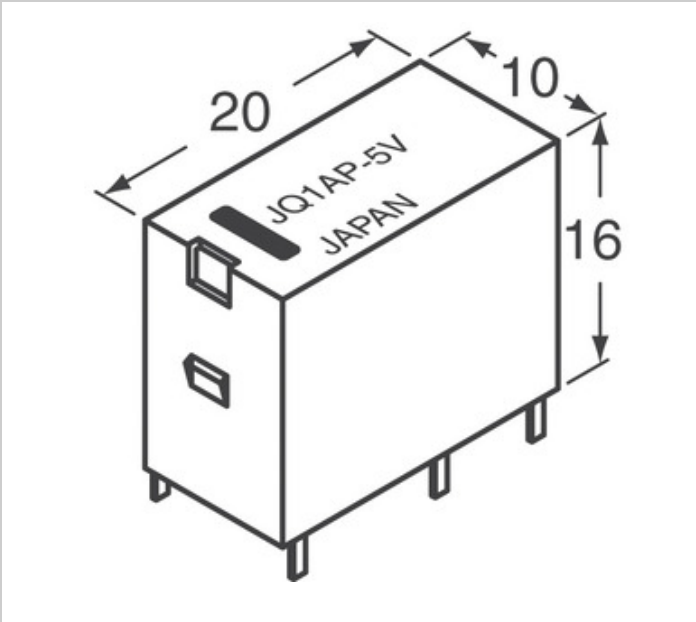

Image may be representation. See specifications for product details.

JQ1-18V-F

Part Number:	JQ1-18V-F
Manufacturer/Brand:	Panasonic
Product description	JQ RELAY 1 FORM C 18V
Datasheets:	JQ1-18V-F.pdf
RoHs Status	Lead free / RoHS Compliant
Stock Condition	29934 pcs stock
Ship From	Hong Kong
Shipment Way	DHL/Fedex/TNT/UPS/EMS

REQUEST FOR QUOTATION

Specifications of JQ1-18V-F

PART NUMBER	JQ1-18V-F
MANUFACTURER	Panasonic
DESCRIPTION	JQ RELAY 1 FORM C 18V
LEAD FREE STATUS / ROHS STATUS	Lead free / RoHS Compliant
QUANTITY AVAILABLE	29934 pcs
DATA SHEET	JQ1-18V-F.pdf
SERIES	*
MOISTURE SENSITIVITY LEVEL (MSL)	1 (Unlimited)
LEAD FREE STATUS / ROHS STATUS	Lead free / RoHS Compliant
DETAILED DESCRIPTION	Relay Coil

Related Tags

Panasonic JQ1-18V-F	JQ1-18V-F Distributor	JQ1-18V-F Supplier
JQ1-18V-F Price	JQ1-18V-F Pictures	JQ1-18V-F Image
JQ1-18V-F PDF Datasheet	JQ1-18V-F Download Datasheet	JQ1-18V-F Datasheet
JQ1-18V-F Stock	Buy JQ1-18V-F	Buy Panasonic JQ1-18V-F
Panasonic JQ1-18V-F	Panasonic Supplier	Panasonic Distributor
Panasonic JQ1-18V-F	Panasonic - Consumer Division JQ1-18V-F	Panasonic - Consumer Electronics Corp. JQ1-18V-F
Panasonic Battery Group JQ1-18V-F	Panasonic Electric Works - ACSD JQ1-18V-F	Panasonic Electronic Components - Semiconductor Pr JQ1-18V-F
Panasonic - ATG JQ1-18V-F	Panasonic - BSG JQ1-18V-F	Panasonic - DTG JQ1-18V-F
Panasonic Electric Works JQ1-18V-F	Panasonic Electronic Components JQ1-18V-F	Panasonic Industrial Automation Sales JQ1-18V-F
Panasonic Semiconductor JQ1-18V-F		

Related Products

JQ1-6V
Manufacturers: Panasonic
Description: RELAY GENERAL PURPOSE SPDT 5A 6V
In stock: 5303 pcs
RFQ

JQ1-6V-F
Manufacturers: Panasonic
Description: RELAY GENERAL PURPOSE SPDT 5A 6V
In stock: 25493 pcs
RFQ

JQ1-24V-F
Manufacturers: Panasonic
Description: RELAY GEN PURPOSE SPDT 5A 24V
In stock: 22036 pcs
RFQ

JQ1-5V-F
Manufacturers: Panasonic
Description: RELAY GENERAL PURPOSE SPDT 5A 5V
In stock: 18344 pcs
RFQ

JQ1-12V-F
Manufacturers: Panasonic
Description: RELAY GEN PURPOSE SPDT 5A 12V
In stock: 22380 pcs
RFQ

JQ1-5V
Manufacturers: Panasonic
Description: RELAY GENERAL PURPOSE SPDT 5A 5V
In stock: 30922 pcs
RFQ

JQ1-48V
Manufacturers: Panasonic
Description: RELAY GEN PURPOSE SPDT 5A 48V
In stock: 7098 pcs
RFQ

JQ1-24V
Manufacturers: Panasonic
Description: RELAY GEN PURPOSE SPDT 5A 24V
In stock: 4493 pcs
RFQ

JQ1-3V
Manufacturers: Panasonic
Description: RELAY GENERAL PURPOSE SPDT 5A 3V
In stock: 7012 pcs
RFQ

JQ1-48V-F
Manufacturers: Panasonic
Description: RELAY GEN PURPOSE SPDT 5A 48V
In stock: 20296 pcs
RFQ

JQ1-18V
Manufacturers: Panasonic
Description: RELAY GEN PURPOSE SPDT 5A 18V
In stock: 3878 pcs
RFQ

JQ1-12V
Manufacturers: Panasonic
Description: RELAY GEN PURPOSE SPDT 5A 12V
In stock: 2770 pcs
RFQ

Copyright © 2020 Reliable Distributor of Electronic Components

E-mail: Info@infinity-electronic.com
Address: 17F, Gaylord Commercial Building, 114-118 Lockhart Road, Wan Chai, Hong Kong