Honeywell | Honeywell Sensing and Productivity Solutions

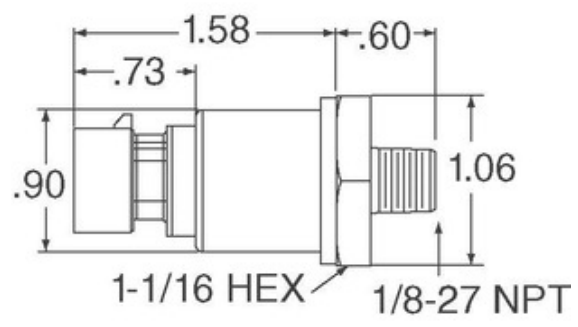


Image may be representation. See specifications for product details.

# MLH040BSB09A

| | |
|---|---|
| Part Number: | MLH040BSB09A |
| Manufacturer/Brand: | Honeywell Sensing and Productivity Solutions |
| Product description | SENSOR SEALED GAUGE 0-40 BAR |
| Datasheets: | 1.MLH040BSB09A.pdf<br>2.MLH040BSB09A.pdf |
| RoHs Status | Lead free / RoHS Compliant |
| Stock Condition | 3057 pcs stock |
| Ship From | Hong Kong |
| Shipment Way | DHL/Fedex/TNT/UPS/EMS |

**REQUEST FOR QUOTATION**

## Specifications of MLH040BSB09A

| | |
|---|---|
| PART NUMBER | MLH040BSB09A |
| MANUFACTURER | Honeywell Sensing and Productivity Solutions |
| DESCRIPTION | SENSOR SEALED GAUGE 0-40 BAR |
| LEAD FREE STATUS / ROHS STATUS | Lead free / RoHS Compliant |
| QUANTITY AVAILABLE | 3057 pcs |
| DATA SHEET | 1.MLH040BSB09A.pdf<br>2.MLH040BSB09A.pdf |
| VOLTAGE - SUPPLY | 5 V ~ 6 V |
| TERMINATION STYLE | Packard Metripak 150 |
| SUPPLIER DEVICE PACKAGE | - |
| SERIES | MLH |
| PRESSURE TYPE | Sealed Gauge |
| PORT STYLE | Threaded |
| PORT SIZE | Female - 7/16" (11.11mm) UNF Schrader |
| PACKAGE / CASE | Cylinder, Metal |
| OUTPUT TYPE | Analog Voltage |
| OUTPUT | 0.5 V ~ 4.5 V |
| OPERATING TEMPERATURE | -40°C ~ 125°C |
| OPERATING PRESSURE | 580.15 PSI (4000 kPa) |
| MOISTURE SENSITIVITY LEVEL (MSL) | 1 (Unlimited) |
| MAXIMUM PRESSURE | 1160.3 PSI (8000 kPa) |
| LEAD FREE STATUS / ROHS STATUS | Lead free / RoHS Compliant |
| FEATURES | Amplified Output, Temperature Compensated |
| DETAILED DESCRIPTION | Pressure Sensor 580.15 PSI (4000 kPa) Sealed Gauge Female - 7/16" (11.11mm) UNF Schrader 0.5 V ~ 4.5 V Cylinder, Metal |
| ACCURACY | ±0.25% |

## Related Tags

| | | |
|---|---|---|
| Honeywell Sensing and Productivity Solutions MLH040BSB09A | MLH040BSB09A Distributor | MLH040BSB09A Supplier |
| MLH040BSB09A Price | MLH040BSB09A Pictures | MLH040BSB09A Image |
| MLH040BSB09A PDF Datasheet | MLH040BSB09A Download Datasheet | MLH040BSB09A Datasheet |
| MLH040BSB09A Stock | Buy MLH040BSB09A | Buy Honeywell Sensing and Productivity Solutions MLH040BSB09A |
| Honeywell Sensing and Productivity Solutions MLH040BSB09A | Honeywell Sensing and Productivity Solutions Supplier | Honeywell Sensing and Productivity Solutions Distributor |
| Honeywell Sensing and Productivity Solutions MLH040BSB09A | HONEYWELL MLH040BSB09A | Honeywell Sensing and Control EMEA MLH040BSB09A |
| Honeywell Sensing and Productivity Solutions T&M MLH040BSB09A | | |

## Related Products

**MLH040BSG13B**
Manufacturers: Honeywell Sensing and Productivity Solutions
Description: MLH ALL METAL PRESS SENSE -ATF
In stock: 3899 pcs
RFQ

**MLH040BSD14B**
Manufacturers: Honeywell Sensing and Productivity Solutions
Description: SENSOR SEALED GAUGE 0-40 BAR
In stock: 3522 pcs
RFQ

**MLH03KPSL06G**
Manufacturers: Honeywell Sensing and Productivity Solutions
Description: MLH ALL METAL PRESS SENSE -ATF
In stock: 4730 pcs
RFQ

**MLH040BGD10B**
Manufacturers: Honeywell Sensing and Productivity Solutions
Description: SENSOR GAUGE 0-40 BAR
In stock: 1125 pcs
RFQ

**MLH040BGH01A**
Manufacturers: Honeywell Sensing and Productivity Solutions
Description: SENSOR GAUGE 0-40 BAR
In stock: 1024 pcs
RFQ

**MLH03KPSL06B**
Manufacturers: Honeywell Sensing and Productivity Solutions
Description: MLH ALL METAL PRESS SENSE -ATF
In stock: 822 pcs
RFQ

**MLH040BSG02B**
Manufacturers: Honeywell Sensing and Productivity Solutions
Description: MLH ALL METAL PRESS SENSE -ATF
In stock: 4624 pcs
RFQ

**MLH040BSB01B**
Manufacturers: Honeywell Sensing and Productivity Solutions
Description: SENSOR SEALED GAUGE 0-40 BAR
In stock: 938 pcs
RFQ

**MLH040BGD09B**
Manufacturers: Honeywell Sensing and Productivity Solutions
Description: SENSOR GAUGE 0-40 BAR
In stock: 6158 pcs
RFQ

**MLH040BSD14A**
Manufacturers: Honeywell Sensing and Productivity Solutions
Description: SENSOR SEALED GAUGE 0-40 BAR
In stock: 1077 pcs
RFQ

**MLH040BSD14E**
Manufacturers: Honeywell Sensing and Productivity Solutions
Description: SENSOR SEALED GAUGE 0-40 BAR
In stock: 3224 pcs
RFQ

**MLH040BSG01B**
Manufacturers: Honeywell Sensing and Productivity Solutions
Description: SENSOR SEALED GAUGE 0-40 BAR
In stock: 6971 pcs
RFQ

**Copyright © 2020 Reliable Distributor of Electronic Components**

E-mail: Info@infinity-electronic.com
Address: 17F, Gaylord Commercial Building, 114-118 Lockhart Road, Wan Chai, Hong Kong