Honeywell | Honeywell Sensing and Productivity Solutions

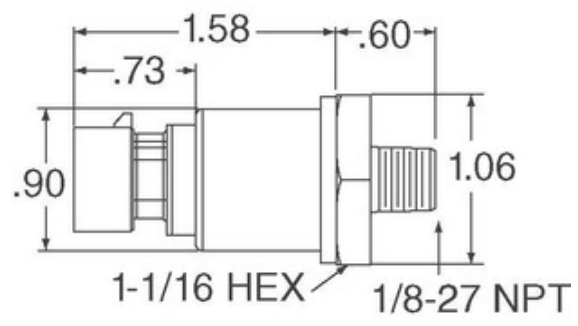

Image may be representation. See specifications for product details.

MLH250BSG13B

Part Number:	MLH250BSG13B
Manufacturer/Brand:	Honeywell Sensing and Productivity Solutions
Product description	MLH ALL METAL PRESS SENSE -ATF
Datasheets:	1.MLH250BSG13B.pdf 2.MLH250BSG13B.pdf
RoHs Status	Lead free / RoHS Compliant
Stock Condition	6512 pcs stock
Ship From	Hong Kong
Shipment Way	DHL/Fedex/TNT/UPS/EMS

REQUEST FOR QUOTATION

Specifications of MLH250BSG13B

PART NUMBER	MLH250BSG13B
MANUFACTURER	Honeywell Sensing and Productivity Solutions
DESCRIPTION	MLH ALL METAL PRESS SENSE -ATF
LEAD FREE STATUS / ROHS STATUS	Lead free / RoHS Compliant
QUANTITY AVAILABLE	6512 pcs
DATA SHEET	1.MLH250BSG13B.pdf 2.MLH250BSG13B.pdf
VOLTAGE - SUPPLY	9.5 V ~ 30 V
SUPPLIER DEVICE PACKAGE	-
SERIES	MLH
PRESSURE TYPE	Sealed Gauge
PORT STYLE	Threaded
PORT SIZE	Male - 1/4" (6.35mm) BSPT
PACKAGE / CASE	Cylinder, Metal
OUTPUT TYPE	Analog Current
OUTPUT	4 mA ~ 20 mA
OPERATING TEMPERATURE	-40°C ~ 125°C
OPERATING PRESSURE	3625.94 PSI (25000 kPa)
MOISTURE SENSITIVITY LEVEL (MSL)	1 (Unlimited)
MAXIMUM PRESSURE	7251.89 PSI (50000 kPa)
LEAD FREE STATUS / ROHS STATUS	Lead free / RoHS Compliant
FEATURES	Amplified Output, Temperature Compensated
DETAILED DESCRIPTION	Pressure Sensor 3625.94 PSI (25000 kPa) Sealed Gauge Male - 1/4" (6.35mm) BSPT 4 mA ~ 20 mA Cylinder, Metal
ACCURACY	±0.25%

Related Tags

- Honeywell Sensing and Productivity Solutions MLH250BSG13B
- MLH250BSG13B Distributor
- MLH250BSG13B Supplier
- MLH250BSG13B Price
- MLH250BSG13B Pictures
- MLH250BSG13B Image
- MLH250BSG13B PDF Datasheet
- MLH250BSG13B Download Datasheet
- MLH250BSG13B Datasheet
- MLH250BSG13B Stock
- Buy MLH250BSG13B
- Buy Honeywell Sensing and Productivity Solutions MLH250BSG13B
- Honeywell Sensing and Productivity Solutions MLH250BSG13B
- Honeywell Sensing and Productivity Solutions Supplier
- Honeywell Sensing and Productivity Solutions Distributor
- Honeywell Sensing and Productivity Solutions MLH250BSG13B
- HONEYWELL MLH250BSG13B
- Honeywell Sensing and Control EMEA MLH250BSG13B
- Honeywell Sensing and Productivity Solutions T&M MLH250BSG13B

Related Products

MLH250BSG13C
Manufacturers: Honeywell Sensing and Productivity Solutions
Description: SENSOR SEALED GAUGE 0-250 BAR
In stock: 6158 pcs
RFQ

MLH250BSD14E
Manufacturers: Honeywell Sensing and Productivity Solutions
Description: SENSOR SEALED GAUGE 0-250 BAR
In stock: 923 pcs
RFQ

MLH250BSG14D
Manufacturers: Honeywell Sensing and Productivity Solutions
Description: SENSOR SEALED GAUGE 0-250 BAR
In stock: 5355 pcs
RFQ

MLH250BSD14A
Manufacturers: Honeywell Sensing and Productivity Solutions
Description: SENSOR SEALED GAUGE 0-250 BAR
In stock: 4275 pcs
RFQ

MLH250BSG13D
Manufacturers: Honeywell Sensing and Productivity Solutions
Description: SENSOR SEALED GAUGE 0-250 BAR
In stock: 6294 pcs
RFQ

MLH250BSD17D
Manufacturers: Honeywell Sensing and Productivity Solutions
Description: MLH ALL METAL PRESS SENSE -ATF
In stock: 5741 pcs
RFQ

MLH250BSG17D
Manufacturers: Honeywell Sensing and Productivity Solutions
Description: MLH ALL METAL PRESS SENSE -ATF
In stock: 921 pcs
RFQ

MLH250BSG02B
Manufacturers: Honeywell Sensing and Productivity Solutions
Description: MLH ALL METAL PRESS SENSE -ATF
In stock: 899 pcs
RFQ

MLH250BSH14A
Manufacturers: Honeywell Sensing and Productivity Solutions
Description: SENSOR SEALED GAUGE 0-250 BAR
In stock: 1208 pcs
RFQ

MLH250BSD14B
Manufacturers: Honeywell Sensing and Productivity Solutions
Description: SENSOR SEALED GAUGE 0-250 BAR
In stock: 985 pcs
RFQ

MLH250BSG15C
Manufacturers: Honeywell Sensing and Productivity Solutions
Description: MLH ALL METAL PRESS SENSE -ATF
In stock: 945 pcs
RFQ

MLH250BSD13D
Manufacturers: Honeywell Sensing and Productivity Solutions
Description: MLH ALL METAL PRESS SENSE -ATF
In stock: 5594 pcs
RFQ

Copyright © 2020 Reliable Distributor of Electronic Components

E-mail: Info@infinity-electronic.com
Address: 17F, Gaylord Commercial Building, 114-118 Lockhart Road, Wan Chai, Hong Kong