Honeywell | Honeywell Sensing and Productivity Solutions

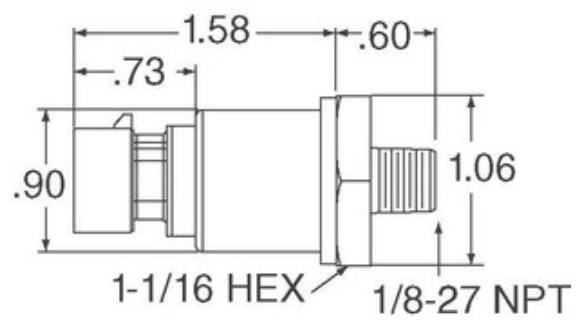

Image may be representation. See specifications for product details.

MLH020BST10A

Part Number:	MLH020BST10A
Manufacturer/Brand:	Honeywell Sensing and Productivity Solutions
Product description	SENSOR SEALED GAUGE 0-20 BAR
Datasheets:	1.MLH020BST10A.pdf 2.MLH020BST10A.pdf
RoHs Status	Lead free / RoHS Compliant
Stock Condition	1098 pcs stock
Ship From	Hong Kong
Shipment Way	DHL/Fedex/TNT/UPS/EMS

REQUEST FOR QUOTATION

Specifications of MLH020BST10A

PART NUMBER	MLH020BST10A
MANUFACTURER	Honeywell Sensing and Productivity Solutions
DESCRIPTION	SENSOR SEALED GAUGE 0-20 BAR
LEAD FREE STATUS / ROHS STATUS	Lead free / RoHS Compliant
QUANTITY AVAILABLE	1098 pcs
DATA SHEET	1.MLH020BST10A.pdf 2.MLH020BST10A.pdf
VOLTAGE - SUPPLY	5 V ~ 6 V
TERMINATION STYLE	Deutsch, 3 Pin
SUPPLIER DEVICE PACKAGE	-
SERIES	MLH
PRESSURE TYPE	Sealed Gauge
PORT STYLE	Threaded
PORT SIZE	Male - 7/16" (11.11mm) UNF
PACKAGE / CASE	Cylinder, Metal
OUTPUT TYPE	Analog Voltage
OUTPUT	0.5 V ~ 4.5 V
OPERATING TEMPERATURE	-40°C ~ 125°C
OPERATING PRESSURE	290.08 PSI (2000 kPa)
MOISTURE SENSITIVITY LEVEL (MSL)	1 (Unlimited)
MAXIMUM PRESSURE	580.15 PSI (4000 kPa)
LEAD FREE STATUS / ROHS STATUS	Lead free / RoHS Compliant
FEATURES	Amplified Output, Temperature Compensated
DETAILED DESCRIPTION	Pressure Sensor 290.08 PSI (2000 kPa) Sealed Gauge Male - 7/16" (11.11mm) UNF 0.5 V ~ 4.5 V Cylinder, Metal
ACCURACY	±0.25%

Related Tags

Honeywell Sensing and Productivity Solutions MLH020BST10A	MLH020BST10A Distributor	MLH020BST10A Supplier
MLH020BST10A Price	MLH020BST10A Pictures	MLH020BST10A Image
MLH020BST10A PDF Datasheet	MLH020BST10A Download Datasheet	MLH020BST10A Datasheet
MLH020BST10A Stock	Buy MLH020BST10A	Buy Honeywell Sensing and Productivity Solutions MLH020BST10A
Honeywell Sensing and Productivity Solutions MLH020BST10A	Honeywell Sensing and Productivity Solutions Supplier	Honeywell Sensing and Productivity Solutions Distributor
Honeywell Sensing and Productivity Solutions MLH020BST10A	HONEYWELL MLH020BST10A	Honeywell Sensing and Control EMEA MLH020BST10A
Honeywell Sensing and Productivity Solutions T&M MLH020BST10A		

Related Products

MLH025BGD14B
Manufacturers: Honeywell Sensing and Productivity Solutions
Description: SENSOR GAUGE 0-25 BAR
In stock: 944 pcs
RFQ

MLH025BGG13B
Manufacturers: Honeywell Sensing and Productivity Solutions
Description: MLH ALL METAL PRESS SENSE -ATF
In stock: 6818 pcs
RFQ

MLH01KPST04A
Manufacturers: Honeywell Sensing and Productivity Solutions
Description: MLH ALL METAL PRESS SENSE -ATF
In stock: 862 pcs
RFQ

MLH01KPSL01A
Manufacturers: Honeywell Sensing and Productivity Solutions
Description: SENSOR SEALED GAUGE 0-1000 PSI
In stock: 4244 pcs
RFQ

MLH025BGG08B
Manufacturers: Honeywell Sensing and Productivity Solutions
Description: SENSOR GAUGE 0-25 BAR
In stock: 999 pcs
RFQ

MLH025BGG20B
Manufacturers: Honeywell Sensing and Productivity Solutions
Description: MLH ALL METAL PRESS SENSE -ATF
In stock: 5780 pcs
RFQ

MLH01KPSC06A
Manufacturers: Honeywell Sensing and Productivity Solutions
Description: MLH ALL METAL PRESS SENSE -ATF
In stock: 3338 pcs
RFQ

MLH01KPSD01A
Manufacturers: Honeywell Sensing and Productivity Solutions
Description: MLH ALL METAL PRESS SENSE -ATF
In stock: 2810 pcs
RFQ

MLH025BGB20B
Manufacturers: Honeywell Sensing and Productivity Solutions
Description: MLH ALL METAL PRESS SENSE -ATF
In stock: 860 pcs
RFQ

MLH01KPSM06A
Manufacturers: Honeywell Sensing and Productivity Solutions
Description: SENSOR SEALED GAUGE 0-1000 PSI
In stock: 763 pcs
RFQ

MLH025BGG02B
Manufacturers: Honeywell Sensing and Productivity Solutions
Description: MLH ALL METAL PRESS SENSE -ATF
In stock: 1049 pcs
RFQ

MLH01KPSP06C
Manufacturers: Honeywell Sensing and Productivity Solutions
Description: SENSOR SEALED GAUGE 0-1000 PSI
In stock: 4937 pcs
RFQ

Copyright © 2020 Reliable Distributor of Electronic Components

E-mail: Info@infinity-electronic.com
Address: 17F, Gaylord Commercial Building, 114-118 Lockhart Road, Wan Chai, Hong Kong