Honeywell | Honeywell Sensing and Productivity Solutions

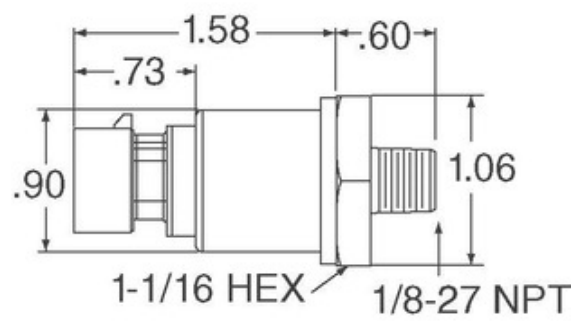

Image may be representation. See specifications for product details.

MLH200PSB09A

Part Number:	MLH200PSB09A
Manufacturer/Brand:	Honeywell Sensing and Productivity Solutions
Product description	MLH ALL METAL PRESS SENSE -ATF
Datasheets:	1.MLH200PSB09A.pdf 2.MLH200PSB09A.pdf
RoHs Status	Lead free / RoHS Compliant
Stock Condition	3168 pcs stock
Ship From	Hong Kong
Shipment Way	DHL/Fedex/TNT/UPS/EMS

REQUEST FOR QUOTATION

Specifications of MLH200PSB09A

PART NUMBER	MLH200PSB09A
MANUFACTURER	Honeywell Sensing and Productivity Solutions
DESCRIPTION	MLH ALL METAL PRESS SENSE -ATF
LEAD FREE STATUS / ROHS STATUS	Lead free / RoHS Compliant
QUANTITY AVAILABLE	3168 pcs
DATA SHEET	1.MLH200PSB09A.pdf 2.MLH200PSB09A.pdf
VOLTAGE - SUPPLY	5 V ~ 6 V
TERMINATION STYLE	Connector
SUPPLIER DEVICE PACKAGE	-
SERIES	MLH
PRESSURE TYPE	Sealed Gauge
PORT STYLE	Threaded
PORT SIZE	Female - 7/16" (11.11mm) UNF Schrader
PACKAGE / CASE	Cylinder, Metal
OUTPUT TYPE	Analog Voltage
OUTPUT	0.5 V ~ 4.5 V
OPERATING TEMPERATURE	-40°C ~ 125°C
OPERATING PRESSURE	200 PSI (1378.95 kPa)
MOISTURE SENSITIVITY LEVEL (MSL)	1 (Unlimited)
MAXIMUM PRESSURE	600 PSI (4136.85 kPa)
LEAD FREE STATUS / ROHS STATUS	Lead free / RoHS Compliant
FEATURES	Amplified Output, Temperature Compensated
DETAILED DESCRIPTION	Pressure Sensor 200 PSI (1378.95 kPa) Sealed Gauge Female - 7/16" (11.11mm) UNF Schrader 0.5 V ~ 4.5 V Cylinder, Metal
ACCURACY	±0.25%

Related Tags

- Honeywell Sensing and Productivity Solutions MLH200PSB09A
- MLH200PSB09A Distributor
- MLH200PSB09A Supplier
- MLH200PSB09A Price
- MLH200PSB09A Pictures
- MLH200PSB09A Image
- MLH200PSB09A PDF Datasheet
- MLH200PSB09A Download Datasheet
- MLH200PSB09A Datasheet
- MLH200PSB09A Stock
- Buy MLH200PSB09A
- Buy Honeywell Sensing and Productivity Solutions MLH200PSB09A
- Honeywell Sensing and Productivity Solutions MLH200PSB09A
- Honeywell Sensing and Productivity Solutions Supplier
- Honeywell Sensing and Productivity Solutions Distributor
- Honeywell Sensing and Productivity Solutions MLH200PSB09A
- HONEYWELL MLH200PSB09A
- Honeywell Sensing and Control EMEA MLH200PSB09A
- Honeywell Sensing and Productivity Solutions T&M MLH200PSB09A

Related Products

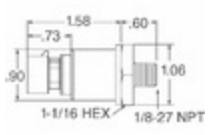

MLH200PGT06B
Manufacturers: Honeywell Sensing and Productivity Solutions
Description: MLH ALL METAL PRESS SENSE -ATF
In stock: 6364 pcs
RFQ

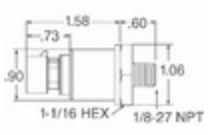

MLH200PSG06C
Manufacturers: Honeywell Sensing and Productivity Solutions
Description: SENSOR SEALED GAUGE 0-200 PSI
In stock: 803 pcs
RFQ

MLH200PSL01A
Manufacturers: Honeywell Sensing and Productivity Solutions
Description: SENSOR SEALED GAUGE 0-200 PSI
In stock: 761 pcs
RFQ

MLH200PSL09A
Manufacturers: Honeywell Sensing and Productivity Solutions
Description: SENSOR AMP 200PSI .5-4.5VDC OUT
In stock: 1051 pcs
RFQ

MLH200PSB06A
Manufacturers: Honeywell Sensing and Productivity Solutions
Description: SENSOR AMP 200PSI .5-4.5VDC OUT
In stock: 852 pcs
RFQ

MLH200PGM09B
Manufacturers: Honeywell Sensing and Productivity Solutions
Description: SENSOR GAUGE 0-200 PSI
In stock: 2869 pcs
RFQ

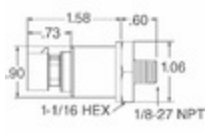

MLH200PSB01B
Manufacturers: Honeywell Sensing and Productivity Solutions
Description: SENSOR SEALED GAUGE 0-200 PSI
In stock: 1111 pcs
RFQ

MLH200PSB06B
Manufacturers: Honeywell Sensing and Productivity Solutions
Description: SENSOR AMP 200PSI 4-20MA OUT
In stock: 951 pcs
RFQ

MLH2012F22NKT000
Manufacturers: TDK Corporation
Description: FIXED IND 22NH 1.85A 44 MOHM SMD
In stock: 1127488 pcs
RFQ

MLH200PSL06A
Manufacturers: Honeywell Sensing and Productivity Solutions
Description: SENSOR SEALED GAUGE 0-200 PSI
In stock: 5961 pcs
RFQ

MLH200PSB09C
Manufacturers: Honeywell Sensing and Productivity Solutions
Description: SENSOR AMP 200PSI 1-6VDC OUT
In stock: 3866 pcs
RFQ

MLH200PGL06B
Manufacturers: Honeywell Sensing and Productivity Solutions
Description: MLH ALL METAL PRESS SENSE -ATF
In stock: 6480 pcs
RFQ

Copyright © 2020 Reliable Distributor of Electronic Components

E-mail: Info@infinity-electronic.com
Address: 17F, Gaylord Commercial Building, 114-118 Lockhart Road, Wan Chai, Hong Kong