Honeywell | Honeywell Sensing and Productivity Solutions

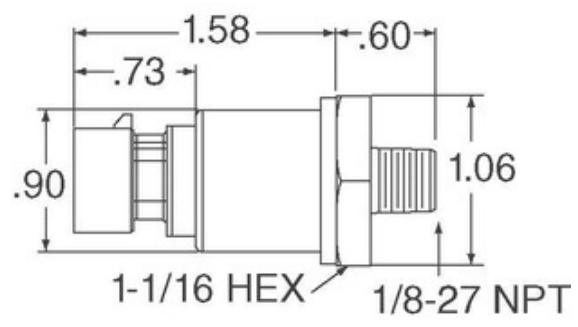

Image may be representation. See specifications for product details.

MLH010BGD18E

Part Number:	MLH010BGD18E
Manufacturer/Brand:	Honeywell Sensing and Productivity Solutions
Product description	SENSOR GAUGE 0-10 BAR
Datasheets:	1.MLH010BGD18E.pdf 2.MLH010BGD18E.pdf
RoHs Status	Lead free / RoHS Compliant
Stock Condition	961 pcs stock
Ship From	Hong Kong
Shipment Way	DHL/Fedex/TNT/UPS/EMS

REQUEST FOR QUOTATION

Specifications of MLH010BGD18E

PART NUMBER	MLH010BGD18E
MANUFACTURER	Honeywell Sensing and Productivity Solutions
DESCRIPTION	SENSOR GAUGE 0-10 BAR
LEAD FREE STATUS / ROHS STATUS	Lead free / RoHS Compliant
QUANTITY AVAILABLE	961 pcs
DATA SHEET	1.MLH010BGD18E.pdf 2.MLH010BGD18E.pdf
VOLTAGE - SUPPLY	7 V ~ 30 V
TERMINATION STYLE	M12
SUPPLIER DEVICE PACKAGE	-
SERIES	MLH
PRESSURE TYPE	Vented Gauge
PORT STYLE	Threaded
PORT SIZE	Male - 1/8" (3.18mm) BSP
PACKAGE / CASE	Cylinder, Metal
OUTPUT TYPE	Analog Voltage
OUTPUT	0.5 V ~ 4.5 V
OPERATING TEMPERATURE	-40°C ~ 125°C
OPERATING PRESSURE	145.04 PSI (1000 kPa)
MOISTURE SENSITIVITY LEVEL (MSL)	1 (Unlimited)
MAXIMUM PRESSURE	435.11 PSI (3000 kPa)
LEAD FREE STATUS / ROHS STATUS	Lead free / RoHS Compliant
FEATURES	Amplified Output, Temperature Compensated
DETAILED DESCRIPTION	Pressure Sensor 145.04 PSI (1000 kPa) Vented Gauge Male - 1/8" (3.18mm) BSP 0.5 V ~ 4.5 V Cylinder, Metal
ACCURACY	±0.25%

Related Tags

- Honeywell Sensing and Productivity Solutions MLH010BGD18E
- MLH010BGD18E Distributor
- MLH010BGD18E Supplier
- MLH010BGD18E Price
- MLH010BGD18E Pictures
- MLH010BGD18E Image
- MLH010BGD18E PDF Datasheet
- MLH010BGD18E Download Datasheet
- MLH010BGD18E Datasheet
- MLH010BGD18E Stock
- Buy MLH010BGD18E
- Buy Honeywell Sensing and Productivity Solutions MLH010BGD18E
- Honeywell Sensing and Productivity Solutions MLH010BGD18E
- Honeywell Sensing and Productivity Solutions Supplier
- Honeywell Sensing and Productivity Solutions Distributor
- Honeywell Sensing and Productivity Solutions MLH010BGD18E
- HONEYWELL MLH010BGD18E
- Honeywell Sensing and Control EMEA MLH010BGD18E
- Honeywell Sensing and Productivity Solutions T&M MLH010BGD18E

Related Products

MLH010BGL14B
Manufacturers: Honeywell Sensing and Productivity Solutions
Description: SENSOR GAUGE 0-10 BAR
In stock: 990 pcs
RFQ

MLH010BGD18B
Manufacturers: Honeywell Sensing and Productivity Solutions
Description: SENSOR GAUGE 0-10 BAR
In stock: 1007 pcs
RFQ

MLH010BGG14B
Manufacturers: Honeywell Sensing and Productivity Solutions
Description: MLH ALL METAL PRESS SENSE -ATF
In stock: 4243 pcs
RFQ

MLH010BGD15A
Manufacturers: Honeywell Sensing and Productivity Solutions
Description: SENSOR GAUGE 0-10 BAR
In stock: 1082 pcs
RFQ

MLH010BGM06B
Manufacturers: Honeywell Sensing and Productivity Solutions
Description: MLH ALL METAL PRESS SENSE -ATF
In stock: 3530 pcs
RFQ

MLH010BGD15E
Manufacturers: Honeywell Sensing and Productivity Solutions
Description: SENSOR GAUGE 0-10 BAR
In stock: 837 pcs
RFQ

MLH010BGD18A
Manufacturers: Honeywell Sensing and Productivity Solutions
Description: SENSOR GAUGE 0-10 BAR
In stock: 3381 pcs
RFQ

MLH010BGD15B
Manufacturers: Honeywell Sensing and Productivity Solutions
Description: SENSOR GAUGE 0-10 BAR
In stock: 1110 pcs
RFQ

MLH010BGG20B
Manufacturers: Honeywell Sensing and Productivity Solutions
Description: MLH ALL METAL PRESS SENSE -ATF
In stock: 1026 pcs
RFQ

MLH010BGD14E
Manufacturers: Honeywell Sensing and Productivity Solutions
Description: SENSOR GAUGE 0-10 BAR
In stock: 823 pcs
RFQ

MLH010BGP01B
Manufacturers: Honeywell Sensing and Productivity Solutions
Description: MLH ALL METAL PRESS SENSE -ATF
In stock: 3650 pcs
RFQ

MLH010BGG01B
Manufacturers: Honeywell Sensing and Productivity Solutions
Description: MLH ALL METAL PRESS SENSE -ATF
In stock: 949 pcs
RFQ

Copyright © 2020 Reliable Distributor of Electronic Components

E-mail: Info@infinity-electronic.com
Address: 17F, Gaylord Commercial Building, 114-118 Lockhart Road, Wan Chai, Hong Kong