Honeywell | Honeywell Sensing and Productivity Solutions

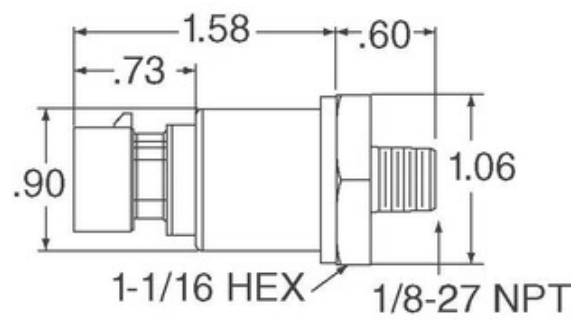

Image may be representation. See specifications for product details.

MLH300PSB06A

Part Number:	MLH300PSB06A
Manufacturer/Brand:	Honeywell Sensing and Productivity Solutions
Product description	SENSOR SEALED GAUGE 0-300 PSI
Datasheets:	1.MLH300PSB06A.pdf 2.MLH300PSB06A.pdf
RoHs Status	Lead free / RoHS Compliant
Stock Condition	5735 pcs stock
Ship From	Hong Kong
Shipment Way	DHL/Fedex/TNT/UPS/EMS

REQUEST FOR QUOTATION

Specifications of MLH300PSB06A

PART NUMBER	MLH300PSB06A
MANUFACTURER	Honeywell Sensing and Productivity Solutions
DESCRIPTION	SENSOR SEALED GAUGE 0-300 PSI
LEAD FREE STATUS / ROHS STATUS	Lead free / RoHS Compliant
QUANTITY AVAILABLE	5735 pcs
DATA SHEET	1.MLH300PSB06A.pdf 2.MLH300PSB06A.pdf
VOLTAGE - SUPPLY	5 V ~ 6 V
TERMINATION STYLE	Packard Metripak 150
SUPPLIER DEVICE PACKAGE	-
SERIES	MLH
PRESSURE TYPE	Sealed Gauge
PORT STYLE	Threaded
PORT SIZE	Male - 1/8" (3.18mm) NPT
PACKAGE / CASE	Cylinder, Metal
OUTPUT TYPE	Analog Voltage
OUTPUT	0.5 V ~ 4.5 V
OPERATING TEMPERATURE	-40°C ~ 125°C
OPERATING PRESSURE	300 PSI (2068.43 kPa)
MOISTURE SENSITIVITY LEVEL (MSL)	1 (Unlimited)
MAXIMUM PRESSURE	900 PSI (6205.28 kPa)
LEAD FREE STATUS / ROHS STATUS	Lead free / RoHS Compliant
FEATURES	Amplified Output, Temperature Compensated
DETAILED DESCRIPTION	Pressure Sensor 300 PSI (2068.43 kPa) Sealed Gauge Male - 1/8" (3.18mm) NPT 0.5 V ~ 4.5 V Cylinder, Metal
ACCURACY	±0.25%

Related Tags

Honeywell Sensing and Productivity Solutions MLH300PSB06A	MLH300PSB06A Distributor	MLH300PSB06A Supplier
MLH300PSB06A Price	MLH300PSB06A Pictures	MLH300PSB06A Image
MLH300PSB06A PDF Datasheet	MLH300PSB06A Download Datasheet	MLH300PSB06A Datasheet
MLH300PSB06A Stock	Buy MLH300PSB06A	Buy Honeywell Sensing and Productivity Solutions MLH300PSB06A
Honeywell Sensing and Productivity Solutions MLH300PSB06A	Honeywell Sensing and Productivity Solutions Supplier	Honeywell Sensing and Productivity Solutions Distributor
Honeywell Sensing and Productivity Solutions MLH300PSB06A	HONEYWELL MLH300PSB06A	Honeywell Sensing and Control EMEA MLH300PSB06A
Honeywell Sensing and Productivity Solutions T&M MLH300PSB06A		

Related Products

MLH300PSB09E
Manufacturers: Honeywell Sensing and Productivity Solutions
Description: SENSOR AMP 300PSI .5-4.5VDC OUT
In stock: 995 pcs
RFQ

MLH300PSB01B
Manufacturers: Honeywell Sensing and Productivity Solutions
Description: SENSOR AMP 300PSI 4-20MA OUT
In stock: 965 pcs
RFQ

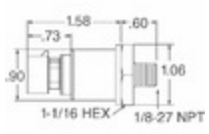

MLH300PSB06B
Manufacturers: Honeywell Sensing and Productivity Solutions
Description: MLH ALL METAL PRESS SENSE -ATF
In stock: 4320 pcs
RFQ

MLH300PSB01C
Manufacturers: Honeywell Sensing and Productivity Solutions
Description: SENSOR AMP 300PSI 1-6VDC OUT
In stock: 684 pcs
RFQ

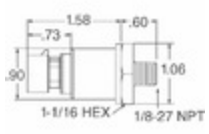

MLH300PSB02A
Manufacturers: Honeywell Sensing and Productivity Solutions
Description: SENSOR SEALED GAUGE 0-300 BAR
In stock: 1192 pcs
RFQ

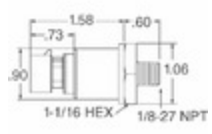

MLH300PSD13B
Manufacturers: Honeywell Sensing and Productivity Solutions
Description: MLH ALL METAL PRESS SENSE -ATF
In stock: 6413 pcs
RFQ

MLH300PSB09A
Manufacturers: Honeywell Sensing and Productivity Solutions
Description: SENSOR AMP 300PSI .5-4.5VDC OUT
In stock: 4092 pcs
RFQ

MLH300PGL06A
Manufacturers: Honeywell Sensing and Productivity Solutions
Description: MLH ALL METAL PRESS SENSE -ATF
In stock: 4937 pcs
RFQ

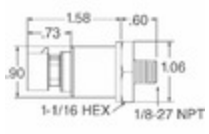

MLH300PSG01G
Manufacturers: Honeywell Sensing and Productivity Solutions
Description: MLH ALL METAL PRESS SENSE -ATF
In stock: 6020 pcs
RFQ

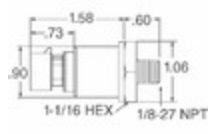

MLH300PSB09B
Manufacturers: Honeywell Sensing and Productivity Solutions
Description: MLH ALL METAL PRESS SENSE -ATF
In stock: 4313 pcs
RFQ

MLH300PSB01A
Manufacturers: Honeywell Sensing and Productivity Solutions
Description: SENSOR AMP 300PSI .5-4.5VDC OUT
In stock: 936 pcs
RFQ

MLH300PSB01E
Manufacturers: Honeywell Sensing and Productivity Solutions
Description: SENSOR AMP 300PSI .5-4.5VDC OUT
In stock: 5910 pcs
RFQ

Copyright © 2020 Reliable Distributor of Electronic Components

E-mail: Info@infinity-electronic.com
Address: 17F, Gaylord Commercial Building, 114-118 Lockhart Road, Wan Chai, Hong Kong