Honeywell | Honeywell Sensing and Productivity Solutions

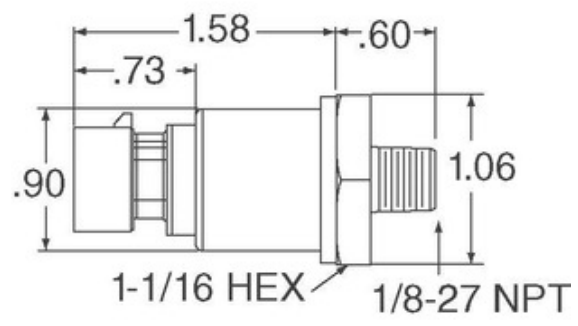

Image may be representation. See specifications for product details.

MLH150BSL03B

Part Number:	MLH150BSL03B
Manufacturer/Brand:	Honeywell Sensing and Productivity Solutions
Product description	SENSOR SEALED GAUGE 0-150 PSI
Datasheets:	1.MLH150BSL03B.pdf 2.MLH150BSL03B.pdf
RoHs Status	Lead free / RoHS Compliant
Stock Condition	868 pcs stock
Ship From	Hong Kong
Shipment Way	DHL/Fedex/TNT/UPS/EMS

REQUEST FOR QUOTATION

Specifications of MLH150BSL03B

PART NUMBER	MLH150BSL03B
MANUFACTURER	Honeywell Sensing and Productivity Solutions
DESCRIPTION	SENSOR SEALED GAUGE 0-150 PSI
LEAD FREE STATUS / ROHS STATUS	Lead free / RoHS Compliant
QUANTITY AVAILABLE	868 pcs
DATA SHEET	1.MLH150BSL03B.pdf 2.MLH150BSL03B.pdf
VOLTAGE - SUPPLY	9.5 V ~ 30 V
TERMINATION STYLE	Cable 1m
SUPPLIER DEVICE PACKAGE	-
SERIES	MLH
PRESSURE TYPE	Sealed Gauge
PORT STYLE	Threaded
PORT SIZE	Male - M14 x 1.5
PACKAGE / CASE	Cylinder, Metal
OUTPUT TYPE	Analog Current
OUTPUT	4 mA ~ 20 mA
OPERATING TEMPERATURE	-40°C ~ 125°C
OPERATING PRESSURE	2175.57 PSI (15000 kPa)
MOISTURE SENSITIVITY LEVEL (MSL)	1 (Unlimited)
MAXIMUM PRESSURE	-
LEAD FREE STATUS / ROHS STATUS	Lead free / RoHS Compliant
FEATURES	Amplified Output, Temperature Compensated
DETAILED DESCRIPTION	Pressure Sensor 2175.57 PSI (15000 kPa) Sealed Gauge Male - M14 x 1.5 4 mA ~ 20 mA Cylinder, Metal
ACCURACY	±0.25%

Related Tags

Honeywell Sensing and Productivity Solutions MLH150BSL03B	MLH150BSL03B Distributor	MLH150BSL03B Supplier
MLH150BSL03B Price	MLH150BSL03B Pictures	MLH150BSL03B Image
MLH150BSL03B PDF Datasheet	MLH150BSL03B Download Datasheet	MLH150BSL03B Datasheet
MLH150BSL03B Stock	Buy MLH150BSL03B	Buy Honeywell Sensing and Productivity Solutions MLH150BSL03B
Honeywell Sensing and Productivity Solutions MLH150BSL03B	Honeywell Sensing and Productivity Solutions Supplier	Honeywell Sensing and Productivity Solutions Distributor
Honeywell Sensing and Productivity Solutions MLH150BSL03B	HONEYWELL MLH150BSL03B	Honeywell Sensing and Control EMEA MLH150BSL03B
Honeywell Sensing and Productivity Solutions T&M MLH150BSL03B		

Related Products

MLH150PGB06A
Manufacturers: Honeywell Sensing and Productivity Solutions
Description: SENSOR AMP 150PSI .5-4.5VDC OUT
In stock: 972 pcs
RFQ

MLH125PGL01C
Manufacturers: Honeywell Sensing and Productivity Solutions
Description: MLH ALL METAL PRESS SENSE GAUGE
In stock: 582 pcs
RFQ

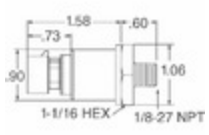

MLH150BSH08A
Manufacturers: Honeywell Sensing and Productivity Solutions
Description: MLH ALL METAL PRESS SENSE -ATF
In stock: 6755 pcs
RFQ

MLH150PGB01A
Manufacturers: Honeywell Sensing and Productivity Solutions
Description: SENSOR AMP 150PSI .5-4.5VDC OUT
In stock: 876 pcs
RFQ

MLH150PGB01B
Manufacturers: Honeywell Sensing and Productivity Solutions
Description: SENSOR AMP 150PSI 4-20MA OUT
In stock: 959 pcs
RFQ

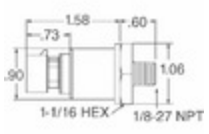

MLH125PGB06C
Manufacturers: Honeywell Sensing and Productivity Solutions
Description: MLH ALL METAL PRESS SENSE GAUGE
In stock: 5809 pcs
RFQ

MLH150PGB06G
Manufacturers: Honeywell Sensing and Productivity Solutions
Description: SENSOR AMP 150PSI 1-5VDC OUT
In stock: 673 pcs
RFQ

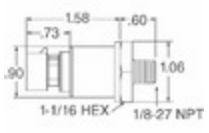

MLH125PGB01C
Manufacturers: Honeywell Sensing and Productivity Solutions
Description: MLH ALL METAL PRESS SENSE GAUGE
In stock: 6712 pcs
RFQ

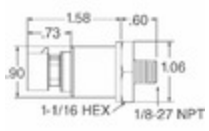

MLH125PGB06B
Manufacturers: Honeywell Sensing and Productivity Solutions
Description: MLH ALL METAL PRESS SENSE -ATF
In stock: 5617 pcs
RFQ

MLH150PAB01A
Manufacturers: Honeywell Sensing and Productivity Solutions
Description: SENSOR AMP 150PSI .5-4.5VDC OUT
In stock: 4252 pcs
RFQ

MLH150PGB06B
Manufacturers: Honeywell Sensing and Productivity Solutions
Description: SENSOR AMP 150PSI 4-20MA OUT
In stock: 2726 pcs
RFQ

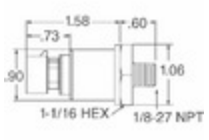

MLH125PGB06A
Manufacturers: Honeywell Sensing and Productivity Solutions
Description: MLH ALL METAL PRESS SENSE -ATF
In stock: 5552 pcs
RFQ

Copyright © 2020 Reliable Distributor of Electronic Components

E-mail: Info@infinity-electronic.com
Address: 17F, Gaylord Commercial Building, 114-118 Lockhart Road, Wan Chai, Hong Kong