Honeywell | Honeywell Sensing and Productivity Solutions

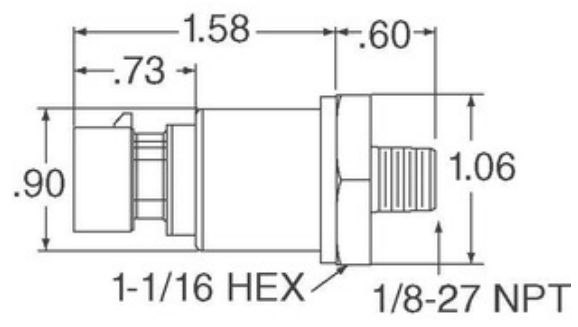

Image may be representation. See specifications for product details.

MLH040BSL14A

Part Number:	MLH040BSL14A
Manufacturer/Brand:	Honeywell Sensing and Productivity Solutions
Product description	MLH ALL METAL PRESS SENSE -ATF
Datasheets:	1.MLH040BSL14A.pdf 2.MLH040BSL14A.pdf
RoHs Status	Lead free / RoHS Compliant
Stock Condition	936 pcs stock
Ship From	Hong Kong
Shipment Way	DHL/Fedex/TNT/UPS/EMS

REQUEST FOR QUOTATION

Specifications of MLH040BSL14A

PART NUMBER	MLH040BSL14A
MANUFACTURER	Honeywell Sensing and Productivity Solutions
DESCRIPTION	MLH ALL METAL PRESS SENSE -ATF
LEAD FREE STATUS / ROHS STATUS	Lead free / RoHS Compliant
QUANTITY AVAILABLE	936 pcs
DATA SHEET	1.MLH040BSL14A.pdf 2.MLH040BSL14A.pdf
VOLTAGE - SUPPLY	5 V ~ 6 V
SUPPLIER DEVICE PACKAGE	-
SERIES	MLH
PRESSURE TYPE	Sealed Gauge
PORT STYLE	Threaded
PORT SIZE	Male - 1/4" (6.35mm) BSP
PACKAGE / CASE	Cylinder, Metal
OUTPUT TYPE	Analog Voltage
OUTPUT	0.5 V ~ 4.5 V
OPERATING TEMPERATURE	-40°C ~ 125°C
OPERATING PRESSURE	580.15 PSI (4000 kPa)
MOISTURE SENSITIVITY LEVEL (MSL)	1 (Unlimited)
MAXIMUM PRESSURE	1160.3 PSI (8000 kPa)
LEAD FREE STATUS / ROHS STATUS	Lead free / RoHS Compliant
FEATURES	Amplified Output, Temperature Compensated
DETAILED DESCRIPTION	Pressure Sensor 580.15 PSI (4000 kPa) Sealed Gauge Male - 1/4" (6.35mm) BSP 0.5 V ~ 4.5 V Cylinder, Metal
ACCURACY	±0.25%

Related Tags

- Honeywell Sensing and Productivity Solutions MLH040BSL14A
- MLH040BSL14A Distributor
- MLH040BSL14A Supplier
- MLH040BSL14A Price
- MLH040BSL14A Pictures
- MLH040BSL14A Image
- MLH040BSL14A PDF Datasheet
- MLH040BSL14A Download Datasheet
- MLH040BSL14A Datasheet
- MLH040BSL14A Stock
- Buy MLH040BSL14A
- Buy Honeywell Sensing and Productivity Solutions MLH040BSL14A
- Honeywell Sensing and Productivity Solutions MLH040BSL14A
- Honeywell Sensing and Productivity Solutions Supplier
- Honeywell Sensing and Productivity Solutions Distributor
- Honeywell Sensing and Productivity Solutions MLH040BSL14A
- HONEYWELL MLH040BSL14A
- Honeywell Sensing and Control EMEA MLH040BSL14A
- Honeywell Sensing and Productivity Solutions T&M MLH040BSL14A

Related Products

MLH040BSG17B
Manufacturers: Honeywell Sensing and Productivity Solutions
Description: MLH ALL METAL PRESS SENSE -ATF
In stock: 862 pcs
RFQ

MLH04KPSL01A
Manufacturers: Honeywell Sensing and Productivity Solutions
Description: MLH ALL METAL PRESS SENSE -ATF
In stock: 3116 pcs
RFQ

MLH050BSB14A
Manufacturers: Honeywell Sensing and Productivity Solutions
Description: SENSOR SEALED GAUGE 0-50 BAR
In stock: 981 pcs
RFQ

MLH040BST14E
Manufacturers: Honeywell Sensing and Productivity Solutions
Description: MLH ALL METAL PRESS SENSE -ATF
In stock: 999 pcs
RFQ

MLH040BSG13B
Manufacturers: Honeywell Sensing and Productivity Solutions
Description: MLH ALL METAL PRESS SENSE -ATF
In stock: 3899 pcs
RFQ

MLH040BSG13E
Manufacturers: Honeywell Sensing and Productivity Solutions
Description: MLH ALL METAL PRESS SENSE -ATF
In stock: 6668 pcs
RFQ

MLH040BSG01B
Manufacturers: Honeywell Sensing and Productivity Solutions
Description: SENSOR SEALED GAUGE 0-40 BAR
In stock: 6971 pcs
RFQ

MLH040BSG02B
Manufacturers: Honeywell Sensing and Productivity Solutions
Description: MLH ALL METAL PRESS SENSE -ATF
In stock: 4624 pcs
RFQ

MLH04KPSL12E
Manufacturers: Honeywell Sensing and Productivity Solutions
Description: MLH ALL METAL PRESS SENSE -ATF
In stock: 889 pcs
RFQ

MLH040BSL04B
Manufacturers: Honeywell Sensing and Productivity Solutions
Description: SENSOR SEALED GAUGE 0-40 BAR
In stock: 867 pcs
RFQ

MLH050BSD12E
Manufacturers: Honeywell Sensing and Productivity Solutions
Description: MLH ALL METAL PRESS SENSE -ATF
In stock: 986 pcs
RFQ

MLH04KPSL12A
Manufacturers: Honeywell Sensing and Productivity Solutions
Description: SENSOR SEALED GAUGE 0-4000 PSI
In stock: 5936 pcs
RFQ

Copyright © 2020 Reliable Distributor of Electronic Components

E-mail: Info@infinity-electronic.com
Address: 17F, Gaylord Commercial Building, 114-118 Lockhart Road, Wan Chai, Hong Kong