Panasonic | Panasonic

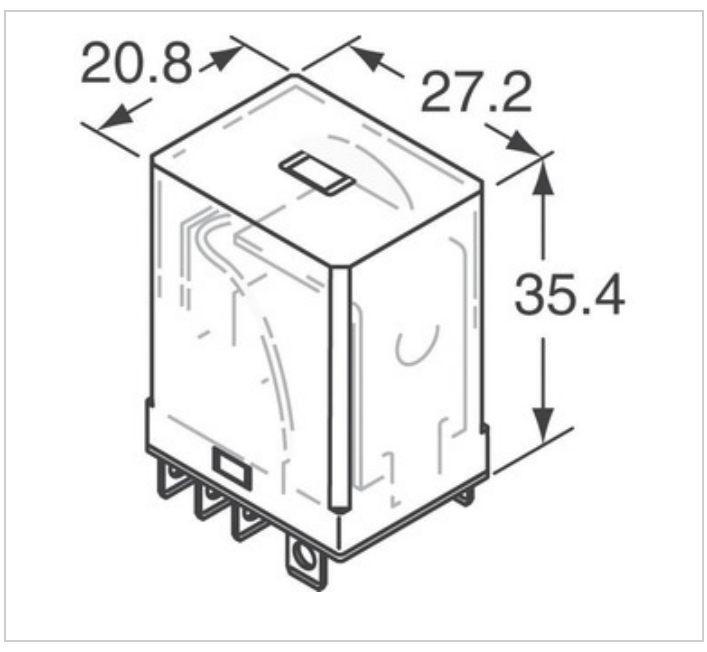

Image may be representation. See specifications for product details.

HL1-HTM-DC6V-F

Part Number:	HL1-HTM-DC6V-F
Manufacturer/Brand:	Panasonic
Product description	HL RELAY 1 FORM C 6VDC
Datasheets:	HL1-HTM-DC6V-F.pdf
RoHs Status	Lead free / RoHS Compliant
Stock Condition	10390 pcs stock
Ship From	Hong Kong
Shipment Way	DHL/Fedex/TNT/UPS/EMS

REQUEST FOR QUOTATION

Specifications of HL1-HTM-DC6V-F

PART NUMBER	HL1-HTM-DC6V-F
MANUFACTURER	Panasonic
DESCRIPTION	HL RELAY 1 FORM C 6VDC
LEAD FREE STATUS / ROHS STATUS	Lead free / RoHS Compliant
QUANTITY AVAILABLE	10390 pcs
DATA SHEET	HL1-HTM-DC6V-F.pdf
SERIES	*
MOISTURE SENSITIVITY LEVEL (MSL)	1 (Unlimited)
LEAD FREE STATUS / ROHS STATUS	Lead free / RoHS Compliant
DETAILED DESCRIPTION	Relay Coil

Related Tags

Panasonic HL1-HTM-DC6V-F	HL1-HTM-DC6V-F Distributor	HL1-HTM-DC6V-F Supplier
HL1-HTM-DC6V-F Price	HL1-HTM-DC6V-F Pictures	HL1-HTM-DC6V-F Image
HL1-HTM-DC6V-F PDF Datasheet	HL1-HTM-DC6V-F Download Datasheet	HL1-HTM-DC6V-F Datasheet
HL1-HTM-DC6V-F Stock	Buy HL1-HTM-DC6V-F	Buy Panasonic HL1-HTM-DC6V-F
Panasonic HL1-HTM-DC6V-F	Panasonic Supplier	Panasonic Distributor
Panasonic HL1-HTM-DC6V-F	Panasonic - Consumer Division HL1-HTM-DC6V-F	Panasonic - Consumer Electronics Corp. HL1-HTM-DC6V-F
Panasonic Battery Group HL1-HTM-DC6V-F	Panasonic Electric Works - ACSD HL1-HTM-DC6V-F	Panasonic Electronic Components - Semiconductor Pr HL1-HTM-DC6V-F
Panasonic - ATG HL1-HTM-DC6V-F	Panasonic - BSG HL1-HTM-DC6V-F	Panasonic - DTG HL1-HTM-DC6V-F
Panasonic Electric Works HL1-HTM-DC6V-F	Panasonic Electronic Components HL1-HTM-DC6V-F	Panasonic Industrial Automation Sales HL1-HTM-DC6V-F
Panasonic Semiconductor HL1-HTM-DC6V-F		

Related Products

HL1-HTM-DC6V
Manufacturers: Panasonic
Description: RELAY GEN PURPOSE SPDT 15A 6V
In stock: 5967 pcs
RFQ

HL1-HTM-DC24V-F
Manufacturers: Panasonic
Description: RELAY GEN PURPOSE SPDT 15A 24V
In stock: 7950 pcs
RFQ

HL1-L-AC100V-F
Manufacturers: Panasonic
Description: RELAY GEN PURPOSE SPDT 15A 100V
In stock: 6390 pcs
RFQ

HL1-L-AC240V-F
Manufacturers: Panasonic
Description: RELAY GENERAL PURPOSE
In stock: 6979 pcs
RFQ

HL1-L-AC115V
Manufacturers: Panasonic
Description: RELAY GEN PURPOSE SPDT 15A 115V
In stock: 3342 pcs
RFQ

HL1-HTM-DC24V
Manufacturers: Panasonic
Description: RELAY GEN PURPOSE SPDT 15A 24V
In stock: 2707 pcs
RFQ

HL1-L-AC120V-F
Manufacturers: Panasonic
Description: RELAY GENERAL PURPOSE
In stock: 4453 pcs
RFQ

HL1-L-AC200V-F
Manufacturers: Panasonic
Description: RELAY GENERAL PURPOSE
In stock: 5225 pcs
RFQ

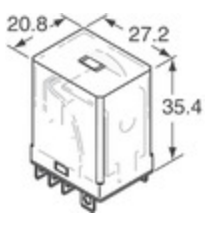

HL1-HTM-DC12V-F
Manufacturers: Panasonic
Description: HL RELAY 1 FORM C 12VDC
In stock: 15874 pcs
RFQ

HL1-HTM-DC48V-F
Manufacturers: Panasonic
Description: RELAY GENERAL PURPOSE
In stock: 3966 pcs
RFQ

HL1-L-AC12V-F
Manufacturers: Panasonic
Description: RELAY GENERAL PURPOSE
In stock: 3683 pcs
RFQ

HL1-HTM-DC48V
Manufacturers: Panasonic
Description: RELAY GEN PURPOSE SPDT 15A 48V
In stock: 6225 pcs
RFQ

Copyright © 2020 Reliable Distributor of Electronic Components
E-mail: Info@infinity-electronic.com
Address: 17F, Gaylord Commercial Building, 114-118 Lockhart Road, Wan Chai, Hong Kong