Diodes Incorporated

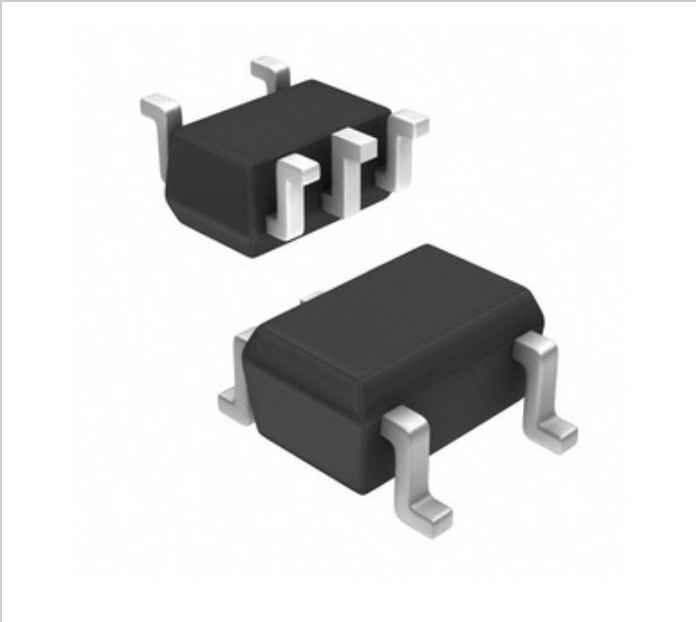

Image may be representation. See specifications for product details.

AP7115-33SEG-7

Part Number:	AP7115-33SEG-7
Manufacturer/Brand:	Diodes Incorporated
Product description	IC REG LINEAR 3.3V 150MA SOT353
Datasheets:	AP7115-33SEG-7.pdf
RoHs Status	Lead free / RoHS Compliant
Stock Condition	892653 pcs stock
Ship From	Hong Kong
Shipment Way	DHL/Fedex/TNT/UPS/EMS

REQUEST FOR QUOTATION

Specifications of AP7115-33SEG-7

PART NUMBER	AP7115-33SEG-7
MANUFACTURER	Diodes Incorporated
DESCRIPTION	IC REG LINEAR 3.3V 150MA SOT353
LEAD FREE STATUS / ROHS STATUS	Lead free / RoHS Compliant
QUANTITY AVAILABLE	892653 pcs
DATA SHEET	AP7115-33SEG-7.pdf
VOLTAGE DROPOUT (MAX)	0.3V @ 150mA
VOLTAGE - OUTPUT (MIN/FIXED)	3.3V
VOLTAGE - OUTPUT (MAX)	-
VOLTAGE - INPUT (MAX)	5.5V
SUPPLIER DEVICE PACKAGE	SOT-353
SERIES	-
PROTECTION FEATURES	Over Current, Over Temperature
PACKAGING	Tape & Reel (TR)
PACKAGE / CASE	5-TSSOP, SC-70-5, SOT-353
PSRR	70dB (1kHz)
OUTPUT TYPE	Fixed
OUTPUT CONFIGURATION	Positive
OTHER NAMES	AP7115-33SEG-7DI AP7115-33SEG-7DI-ND AP7115-33SEG-7DITR
OPERATING TEMPERATURE	-40°C ~ 85°C
NUMBER OF REGULATORS	1
MOUNTING TYPE	Surface Mount
MOISTURE SENSITIVITY LEVEL (MSL)	3 (168 Hours)
LEAD FREE STATUS / ROHS STATUS	Lead free / RoHS Compliant
DETAILED DESCRIPTION	Linear Voltage Regulator IC Positive Fixed 1 Output 3.3V 150mA SOT-353
CURRENT - QUIESCENT (IQ)	80µA
CURRENT - OUTPUT	150mA
CONTROL FEATURES	Enable
BASE PART NUMBER	AP7115

Related Tags

Diodes Incorporated AP7115-33SEG-7	AP7115-33SEG-7 Distributor	AP7115-33SEG-7 Supplier
AP7115-33SEG-7 Price	AP7115-33SEG-7 Pictures	AP7115-33SEG-7 Image
AP7115-33SEG-7 PDF Datasheet	AP7115-33SEG-7 Download Datasheet	AP7115-33SEG-7 Datasheet
AP7115-33SEG-7 Stock	Buy AP7115-33SEG-7	Buy Diodes Incorporated AP7115-33SEG-7
Diodes Incorporated AP7115-33SEG-7	Diodes Incorporated Supplier	Diodes Incorporated Distributor
Diodes Incorporated AP7115-33SEG-7	Diodes Inc AP7115-33SEG-7	Pericom Semiconductor AP7115-33SEG-7
Zetex Semiconductors (Diodes Incorporated) AP7115-33SEG-7		

Related Products

AP7115-29SEG-7
Manufacturers: Diodes Incorporated
Description: IC REG LINEAR 2.85V 150MA SOT353
In stock: 935562 pcs
RFQ

AP7115-29WG-7
Manufacturers: Diodes Incorporated
Description: IC REG LINEAR 2.85V 150MA SOT25
In stock: 537315 pcs
RFQ

AP7115-33WG-7
Manufacturers: Diodes Incorporated
Description: IC REG LINEAR 3.3V 150MA SOT25
In stock: 572245 pcs
RFQ

AP7115-35SEG-7
Manufacturers: Diodes Incorporated
Description: IC REG LINEAR 3.5V 150MA SOT353
In stock: 777361 pcs
RFQ

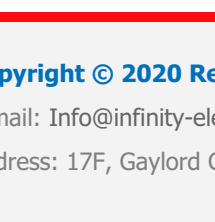

AP7115-28SEG-7
Manufacturers: Diodes Incorporated
Description: IC REG LINEAR 2.8V 150MA SOT353
In stock: 878117 pcs
RFQ

AP7115-28WG-7
Manufacturers: Diodes Incorporated
Description: IC REG LINEAR 2.8V 150MA SOT25
In stock: 472680 pcs
RFQ

AP7165-SPG-13
Manufacturers: Diodes Incorporated
Description: IC REG LINEAR POS ADJ 600MA 8SOP
In stock: 106419 pcs
RFQ

AP7115-30SEG-7
Manufacturers: Diodes Incorporated
Description: IC REG LINEAR 3V 150MA SOT353
In stock: 769772 pcs
RFQ

AP7165-FNG-7
Manufacturers: Diodes Incorporated
Description: IC REG LIN POS ADJ 600MA 10DFN
In stock: 122741 pcs
RFQ

AP7167-FNG-7
Manufacturers: Diodes Incorporated
Description: IC REG LIN POS ADJ 1.2A 10DFN
In stock: 253309 pcs
RFQ

AP7115-35WG-7
Manufacturers: Diodes Incorporated
Description: IC REG LINEAR 3.5V 150MA SOT25
In stock: 589666 pcs
RFQ

AP7115-30WG-7
Manufacturers: Diodes Incorporated
Description: IC REG LINEAR 3V 150MA SOT25
In stock: 480187 pcs
RFQ

Copyright © 2020 Reliable Distributor of Electronic Components

E-mail: Info@infinity-electronic.com
Address: 17F, Gaylord Commercial Building, 114-118 Lockhart Road, Wan Chai, Hong Kong