Honeywell | Honeywell Sensing and Productivity Solutions

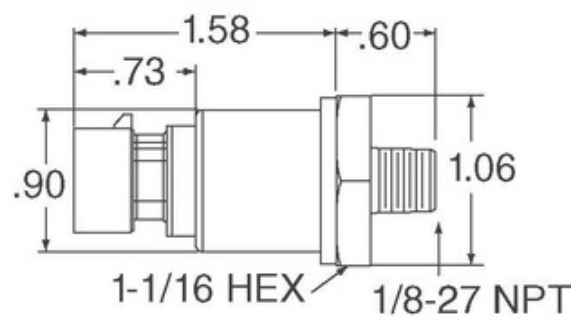


Image may be representation. See specifications for product details.

# MLH010BSG19B

| | |
|---|---|
| Part Number: | MLH010BSG19B |
| Manufacturer/Brand: | Honeywell Sensing and Productivity Solutions |
| Product description | TRANS MLH010 BAR S 43650-C PT1 |
| Datasheets: | 1.MLH010BSG19B.pdf<br>2.MLH010BSG19B.pdf |
| RoHs Status | Lead free / RoHS Compliant |
| Stock Condition | 4757 pcs stock |
| Ship From | Hong Kong |
| Shipment Way | DHL/Fedex/TNT/UPS/EMS |

**REQUEST FOR QUOTATION**

## Specifications of MLH010BSG19B

| | |
|---|---|
| PART NUMBER | MLH010BSG19B |
| MANUFACTURER | Honeywell Sensing and Productivity Solutions |
| DESCRIPTION | TRANS MLH010 BAR S 43650-C PT1 |
| LEAD FREE STATUS / ROHS STATUS | Lead free / RoHS Compliant |
| QUANTITY AVAILABLE | 4757 pcs |
| DATA SHEET | 1.MLH010BSG19B.pdf<br>2.MLH010BSG19B.pdf |
| VOLTAGE - SUPPLY | 9.5 V ~ 30 V |
| SUPPLIER DEVICE PACKAGE | - |
| SERIES | MLH |
| PRESSURE TYPE | Sealed Gauge |
| PORT STYLE | Threaded |
| PORT SIZE | Male - 1/8" (3.18mm) BSPT |
| PACKAGE / CASE | Cylinder, Metal |
| OUTPUT TYPE | Analog Current |
| OUTPUT | 4 mA ~ 20 mA |
| OPERATING TEMPERATURE | -40°C ~ 125°C |
| OPERATING PRESSURE | 145.04 PSI (1000 kPa) |
| MOISTURE SENSITIVITY LEVEL (MSL) | 1 (Unlimited) |
| MAXIMUM PRESSURE | 435.11 PSI (3000 kPa) |
| LEAD FREE STATUS / ROHS STATUS | Lead free / RoHS Compliant |
| FEATURES | Amplified Output, Temperature Compensated |
| DETAILED DESCRIPTION | Pressure Sensor 145.04 PSI (1000 kPa) Sealed Gauge Male - 1/8" (3.18mm) BSPT 4 mA ~ 20 mA Cylinder, Metal |
| ACCURACY | ±0.25% |

## Related Tags

- Honeywell Sensing and Productivity Solutions MLH010BSG19B
- MLH010BSG19B Distributor
- MLH010BSG19B Supplier
- MLH010BSG19B Price
- MLH010BSG19B Pictures
- MLH010BSG19B Image
- MLH010BSG19B PDF Datasheet
- MLH010BSG19B Download Datasheet
- MLH010BSG19B Datasheet
- MLH010BSG19B Stock
- Buy MLH010BSG19B
- Buy Honeywell Sensing and Productivity Solutions MLH010BSG19B
- Honeywell Sensing and Productivity Solutions MLH010BSG19B
- Honeywell Sensing and Productivity Solutions Supplier
- Honeywell Sensing and Productivity Solutions Distributor
- Honeywell Sensing and Productivity Solutions MLH010BSG19B
- HONEYWELL MLH010BSG19B
- Honeywell Sensing and Control EMEA MLH010BSG19B
- Honeywell Sensing and Productivity Solutions T&M MLH010BSG19B

## Related Products

**MLH016BGB01B**
Manufacturers: Honeywell Sensing and Productivity Solutions
Description: SENSOR GAUGE 0-16 BAR
In stock: 1033 pcs
RFQ

**MLH010BSB01B**
Manufacturers: Honeywell Sensing and Productivity Solutions
Description: SENSOR GAUGE 0-10 BAR
In stock: 6851 pcs
RFQ

**MLH010KSC14G**
Manufacturers: Honeywell Sensing and Productivity Solutions
Description: MLH ALL METAL PRESS SENSE
In stock: 722 pcs
RFQ

**MLH010BSH08A**
Manufacturers: Honeywell Sensing and Productivity Solutions
Description: SENSOR SEALED GAUGE 0-10 BAR
In stock: 4593 pcs
RFQ

**MLH010BGT14A**
Manufacturers: Honeywell Sensing and Productivity Solutions
Description: SENSOR GAUGE 0-10 BAR
In stock: 1199 pcs
RFQ

**MLH010BSB06E**
Manufacturers: Honeywell Sensing and Productivity Solutions
Description: SENSOR GAUGE 0-10 BAR
In stock: 799 pcs
RFQ

**MLH010BSG17B**
Manufacturers: Honeywell Sensing and Productivity Solutions
Description: TRANS MLH010 BAR S 43650-C G1
In stock: 850 pcs
RFQ

**MLH010BSG01B**
Manufacturers: Honeywell Sensing and Productivity Solutions
Description: SENSOR GAUGE 0-10 BAR
In stock: 3678 pcs
RFQ

**MLH010BSC17G**
Manufacturers: Honeywell Sensing and Productivity Solutions
Description: MLH ALL METAL PRESS SENSE -ATF
In stock: 764 pcs
RFQ

**MLH010BSL01A**
Manufacturers: Honeywell Sensing and Productivity Solutions
Description: MLH ALL METAL PRESS SENSE -ATF
In stock: 6915 pcs
RFQ

**MLH010BSL06B**
Manufacturers: Honeywell Sensing and Productivity Solutions
Description: SENSOR SEALED GAUGE 0-10 BAR
In stock: 6324 pcs
RFQ

**MLH010BST14A**
Manufacturers: Honeywell Sensing and Productivity Solutions
Description: MLH ALL METAL PRESS SENSE -ATF
In stock: 4204 pcs
RFQ

**Copyright © 2020 Reliable Distributor of Electronic Components**

E-mail: Info@infinity-electronic.com
Address: 17F, Gaylord Commercial Building, 114-118 Lockhart Road, Wan Chai, Hong Kong