Honeywell | Honeywell Sensing and Productivity Solutions

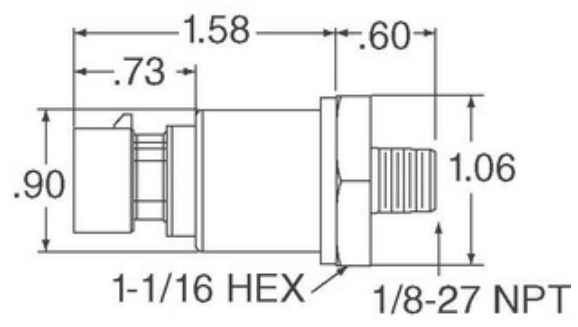

Image may be representation. See specifications for product details.

MLH025BSB01A

Part Number:	MLH025BSB01A
Manufacturer/Brand:	Honeywell Sensing and Productivity Solutions
Product description	MLH ALL METAL PRESS SENSE -ATF
Datasheets:	1.MLH025BSB01A.pdf 2.MLH025BSB01A.pdf
RoHs Status	Lead free / RoHS Compliant
Stock Condition	5206 pcs stock
Ship From	Hong Kong
Shipment Way	DHL/Fedex/TNT/UPS/EMS

REQUEST FOR QUOTATION

Specifications of MLH025BSB01A

PART NUMBER	MLH025BSB01A
MANUFACTURER	Honeywell Sensing and Productivity Solutions
DESCRIPTION	MLH ALL METAL PRESS SENSE -ATF
LEAD FREE STATUS / ROHS STATUS	Lead free / RoHS Compliant
QUANTITY AVAILABLE	5206 pcs
DATA SHEET	1.MLH025BSB01A.pdf 2.MLH025BSB01A.pdf
VOLTAGE - SUPPLY	5 V ~ 6 V
SUPPLIER DEVICE PACKAGE	-
SERIES	MLH
PRESSURE TYPE	Sealed Gauge
PORT STYLE	Threaded
PORT SIZE	Male - 1/4" (6.35mm) NPT
PACKAGE / CASE	Cylinder, Metal
OUTPUT TYPE	Analog Voltage
OUTPUT	0.5 V ~ 4.5 V
OPERATING TEMPERATURE	-40°C ~ 125°C
OPERATING PRESSURE	362.59 PSI (2500 kPa)
MOISTURE SENSITIVITY LEVEL (MSL)	1 (Unlimited)
MAXIMUM PRESSURE	1087.78 PSI (7500 kPa)
LEAD FREE STATUS / ROHS STATUS	Lead free / RoHS Compliant
FEATURES	Amplified Output, Temperature Compensated
DETAILED DESCRIPTION	Pressure Sensor 362.59 PSI (2500 kPa) Sealed Gauge Male - 1/4" (6.35mm) NPT 0.5 V ~ 4.5 V Cylinder, Metal
ACCURACY	±0.25%

Related Tags

- Honeywell Sensing and Productivity Solutions MLH025BSB01A
- MLH025BSB01A Distributor
- MLH025BSB01A Supplier
- MLH025BSB01A Price
- MLH025BSB01A Pictures
- MLH025BSB01A Image
- MLH025BSB01A PDF Datasheet
- MLH025BSB01A Download Datasheet
- MLH025BSB01A Datasheet
- MLH025BSB01A Stock
- Buy MLH025BSB01A
- Buy Honeywell Sensing and Productivity Solutions MLH025BSB01A
- Honeywell Sensing and Productivity Solutions MLH025BSB01A
- Honeywell Sensing and Productivity Solutions Supplier
- Honeywell Sensing and Productivity Solutions Distributor
- Honeywell Sensing and Productivity Solutions MLH025BSB01A
- HONEYWELL MLH025BSB01A
- Honeywell Sensing and Control EMEA MLH025BSB01A
- Honeywell Sensing and Productivity Solutions T&M MLH025BSB01A

Related Products

MLH02KPSB01A
Manufacturers: Honeywell Sensing and Productivity Solutions
Description: MLH ALL METAL PRESS SENSE -ATF
In stock: 6335 pcs
RFQ

MLH025BGG13B
Manufacturers: Honeywell Sensing and Productivity Solutions
Description: MLH ALL METAL PRESS SENSE -ATF
In stock: 6818 pcs
RFQ

MLH025BSG01B
Manufacturers: Honeywell Sensing and Productivity Solutions
Description: SENSOR SEALED GAUGE 0-25 BAR
In stock: 953 pcs
RFQ

MLH025BGG20B
Manufacturers: Honeywell Sensing and Productivity Solutions
Description: MLH ALL METAL PRESS SENSE -ATF
In stock: 5780 pcs
RFQ

MLH025BGD14B
Manufacturers: Honeywell Sensing and Productivity Solutions
Description: SENSOR GAUGE 0-25 BAR
In stock: 944 pcs
RFQ

MLH025BSD14E
Manufacturers: Honeywell Sensing and Productivity Solutions
Description: SENSOR SEALED GAUGE 0-25 BAR
In stock: 3961 pcs
RFQ

MLH025BSD14A
Manufacturers: Honeywell Sensing and Productivity Solutions
Description: SENSOR SEALED GAUGE 0-25 BAR
In stock: 3422 pcs
RFQ

MLH025BSD14B
Manufacturers: Honeywell Sensing and Productivity Solutions
Description: SENSOR SEALED GAUGE 0-25 BAR
In stock: 931 pcs
RFQ

MLH025BSG17B
Manufacturers: Honeywell Sensing and Productivity Solutions
Description: MLH ALL METAL PRESS SENSE -ATF
In stock: 5935 pcs
RFQ

MLH025BGB20B
Manufacturers: Honeywell Sensing and Productivity Solutions
Description: MLH ALL METAL PRESS SENSE -ATF
In stock: 860 pcs
RFQ

MLH025BGG02B
Manufacturers: Honeywell Sensing and Productivity Solutions
Description: MLH ALL METAL PRESS SENSE -ATF
In stock: 1049 pcs
RFQ

MLH025BGG08B
Manufacturers: Honeywell Sensing and Productivity Solutions
Description: SENSOR GAUGE 0-25 BAR
In stock: 999 pcs
RFQ

Copyright © 2020 Reliable Distributor of Electronic Components

E-mail: Info@infinity-electronic.com
Address: 17F, Gaylord Commercial Building, 114-118 Lockhart Road, Wan Chai, Hong Kong