Honeywell | Honeywell Sensing and Productivity Solutions

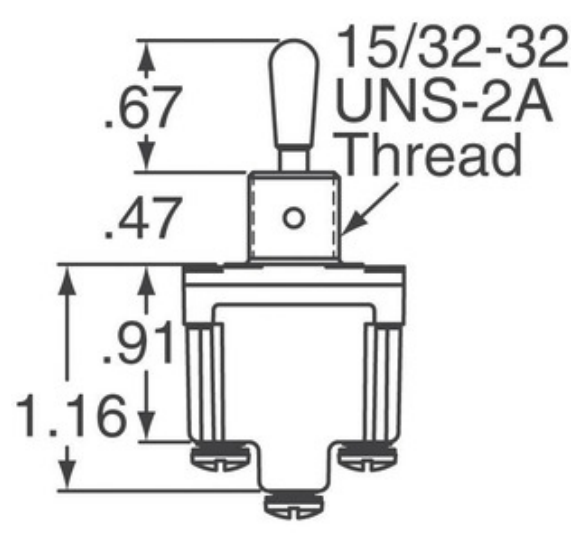

Image may be representation. See specifications for product details.

1NT1-1-NH

Part Number:	1NT1-1-NH
Manufacturer/Brand:	Honeywell Sensing and Productivity Solutions
Product description	SWITCH TOGGLE SPDT 15A 125V
Datasheets:	1.1NT1-1-NH.pdf 2.1NT1-1-NH.pdf 3.1NT1-1-NH.pdf
RoHs Status	Lead free / RoHS Compliant
Stock Condition	5484 pcs stock
Ship From	Hong Kong
Shipment Way	DHL/Fedex/TNT/UPS/EMS

REQUEST FOR QUOTATION

Specifications of 1NT1-1-NH

PART NUMBER	1NT1-1-NH
MANUFACTURER	Honeywell Sensing and Productivity Solutions
DESCRIPTION	SWITCH TOGGLE SPDT 15A 125V
LEAD FREE STATUS / ROHS STATUS	Lead free / RoHS Compliant
QUANTITY AVAILABLE	5484 pcs
DATA SHEET	1.1NT1-1-NH.pdf 2.1NT1-1-NH.pdf 3.1NT1-1-NH.pdf
VOLTAGE RATING - AC	125V
TERMINATION STYLE	Screw Terminal
SWITCH FUNCTION	On-Off-On
SERIES	NT
PANEL CUTOUT DIMENSIONS	Circular - 12.40mm Dia
PACKAGING	Bulk
OPERATING TEMPERATURE	-40°C ~ 71°C
MOUNTING TYPE	Panel Mount
MOISTURE SENSITIVITY LEVEL (MSL)	1 (Unlimited)
LEAD FREE STATUS / ROHS STATUS	Lead free / RoHS Compliant
INGRESS PROTECTION	IP67/68 - Dust Tight, Waterproof
ILLUMINATION VOLTAGE (NOMINAL)	-
ILLUMINATION TYPE, COLOR	-
ILLUMINATION	Non-Illuminated
FEATURES	Sealed
ELECTRICAL LIFE	-
DETAILED DESCRIPTION	Toggle Switch SPDT Panel Mount
CURRENT RATING	15A (AC)
CIRCUIT	SPDT
BUSHING THREAD	15/32-32
ACTUATOR TYPE	Standard Round
ACTUATOR MATERIAL	-
ACTUATOR LENGTH	17.02mm

Related Tags

Honeywell Sensing and Productivity Solutions 1NT1-1-NH	1NT1-1-NH Distributor	1NT1-1-NH Supplier
1NT1-1-NH Price	1NT1-1-NH Pictures	1NT1-1-NH Image
1NT1-1-NH PDF Datasheet	1NT1-1-NH Download Datasheet	1NT1-1-NH Datasheet
1NT1-1-NH Stock	Buy 1NT1-1-NH	Buy Honeywell Sensing and Productivity Solutions 1NT1-1-NH
Honeywell Sensing and Productivity Solutions 1NT1-1-NH	Honeywell Sensing and Productivity Solutions Supplier	Honeywell Sensing and Productivity Solutions Distributor
Honeywell Sensing and Productivity Solutions 1NT1-1-NH	HONEYWELL 1NT1-1-NH	Honeywell Sensing and Control EMEA 1NT1-1-NH
Honeywell Sensing and Productivity Solutions T&M 1NT1-1-NH		

Related Products

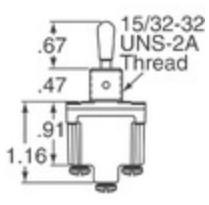

1NT1-1N
Manufacturers: Honeywell Sensing and Productivity Solutions
Description: SWITCH TOGGLE SPDT 15A 125V
In stock: 2912 pcs
RFQ

1NT01L-7951
Manufacturers: Sensata Technologies
Description: THERMOSTAT SPST-NC 160C 9A 250QC
In stock: 25358 pcs
RFQ

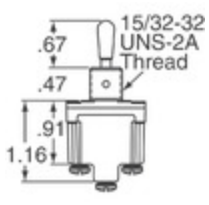

1NT1-21
Manufacturers: Honeywell Sensing and Productivity Solutions
Description: SWITCH TOGGLE SPST 15A 125V
In stock: 6458 pcs
RFQ

1NT01L-7950
Manufacturers: Sensata Technologies
Description: THERMOSTAT SPST-NC 150C 9A 250QC
In stock: 29674 pcs
RFQ

1NT01L-7949
Manufacturers: Sensata Technologies
Description: THERMOSTAT SPST-NC 140C 9A 250QC
In stock: 32948 pcs
RFQ

1NT01L-7952
Manufacturers: Sensata Technologies
Description: THERMOSTAT SPST-NC 170C 9A 250QC
In stock: 31960 pcs
RFQ

1NT1-2
Manufacturers: Honeywell Sensing and Productivity Solutions
Description: SWITCH TOGGLE SPST 15A 125V
In stock: 6117 pcs
RFQ

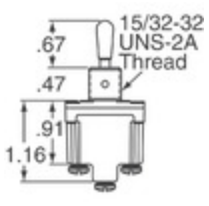

1NT1-1P
Manufacturers: Honeywell Sensing and Productivity Solutions
Description: SWITCH TOGGLE SPDT 15A 125V
In stock: 4441 pcs
RFQ

1NT01L-7953
Manufacturers: Sensata Technologies
Description: THERMOSTAT SPST-NC 180C 9A 250QC
In stock: 28200 pcs
RFQ

1NT1-1
Manufacturers: Honeywell Sensing and Productivity Solutions
Description: SWITCH TOGGLE SPDT 15A 125V
In stock: 4912 pcs
RFQ

1NT1-1A
Manufacturers: Honeywell Sensing and Productivity Solutions
Description: SWITCH TOGGLE SPDT 15A 125V
In stock: 2776 pcs
RFQ

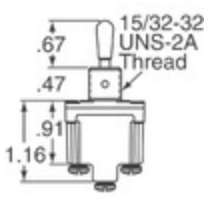

1NT1-1L
Manufacturers: Honeywell Sensing and Productivity Solutions
Description: SWITCH TOGGLE SPDT 15A 125V
In stock: 3237 pcs
RFQ

Copyright © 2020 Reliable Distributor of Electronic Components

E-mail: Info@infinity-electronic.com
Address: 17F, Gaylord Commercial Building, 114-118 Lockhart Road, Wan Chai, Hong Kong