Honeywell | Honeywell Sensing and Productivity Solutions

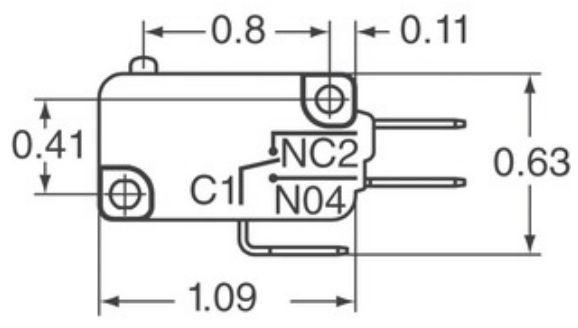

Image may be representation. See specifications for product details.

V15H16-CP400B04-K

Part Number:	V15H16-CP400B04-K
Manufacturer/Brand:	Honeywell Sensing and Productivity Solutions
Product description	SWITCH SNAP ACT SPST-NO 16A 250V
Datasheets:	V15H16-CP400B04-K.pdf
RoHs Status	Lead free / RoHS Compliant
Stock Condition	3392 pcs stock
Ship From	Hong Kong
Shipment Way	DHL/Fedex/TNT/UPS/EMS

REQUEST FOR QUOTATION

Specifications of V15H16-CP400B04-K

PART NUMBER	V15H16-CP400B04-K
MANUFACTURER	Honeywell Sensing and Productivity Solutions
DESCRIPTION	SWITCH SNAP ACT SPST-NO 16A 250V
LEAD FREE STATUS / ROHS STATUS	Lead free / RoHS Compliant
QUANTITY AVAILABLE	3392 pcs
DATA SHEET	V15H16-CP400B04-K.pdf
VOLTAGE RATING - AC	250V
TERMINATION STYLE	Quick Connect - 0.250" (6.3mm)
SWITCH FUNCTION	Off-Mom
SERIES	V15
RELEASE FORCE	30gf
PRETRAVEL	0.219" (5.6mm)
PACKAGING	Bulk
OVERTRAVEL	0.098" (2.5mm)
OPERATING TEMPERATURE	-25°C ~ 150°C
OPERATING POSITION	0.730" (18.5mm)
OPERATING FORCE	140gf
MOUNTING TYPE	Chassis Mount
MOISTURE SENSITIVITY LEVEL (MSL)	1 (Unlimited)
MECHANICAL LIFE	5,000,000 Cycles
LEAD FREE STATUS / ROHS STATUS	Lead free / RoHS Compliant
INGRESS PROTECTION	-
FEATURES	-
ELECTRICAL LIFE	50,000 Cycles
DIFFERENTIAL TRAVEL	0.062" (1.6mm)
CURRENT RATING	16A (AC)
CIRCUIT	SPST-NO
ACTUATOR TYPE	Lever, Simulated Roller

Related Tags

- Honeywell Sensing and Productivity Solutions V15H16-CP400B04-K
- V15H16-CP400B04-K Distributor
- V15H16-CP400B04-K Supplier
- V15H16-CP400B04-K Price
- V15H16-CP400B04-K Pictures
- V15H16-CP400B04-K Image
- V15H16-CP400B04-K PDF Datasheet
- V15H16-CP400B04-K Download Datasheet
- V15H16-CP400B04-K Datasheet
- V15H16-CP400B04-K Stock
- Buy V15H16-CP400B04-K
- Buy Honeywell Sensing and Productivity Solutions V15H16-CP400B04-K
- Honeywell Sensing and Productivity Solutions V15H16-CP400B04-K
- Honeywell Sensing and Productivity Solutions Supplier
- Honeywell Sensing and Productivity Solutions Distributor
- Honeywell Sensing and Productivity Solutions V15H16-CP400B04-K
- HONEYWELL V15H16-CP400B04-K
- Honeywell Sensing and Control EMEA V15H16-CP400B04-K
- Honeywell Sensing and Productivity Solutions T&M V15H16-CP400B04-K

Related Products

V15H16-CP200B03-K
Manufacturers: Honeywell Sensing and Productivity Solutions
Description: SWITCH SNAP ACT SPST-NO 16A 250V
In stock: 3540 pcs
RFQ

V15H10-FP200A03
Manufacturers: Honeywell Sensing and Productivity Solutions
Description: BASIC SWITCH V BASICS V15
In stock: 3210 pcs
RFQ

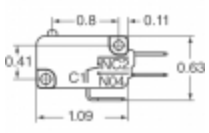

V15H16-CP400-K
Manufacturers: Honeywell Sensing and Productivity Solutions
Description: SWITCH SNAP ACT SPST-NO 16A 250V
In stock: 4759 pcs
RFQ

V15H16-CZ100A05
Manufacturers: Honeywell Sensing and Productivity Solutions
Description: BASIC SWITCH V BASICS V15
In stock: 6580 pcs
RFQ

V15H16-C1Z100
Manufacturers: Honeywell Sensing and Productivity Solutions
Description: BASIC SWITCH V BASICS V15
In stock: 4034 pcs
RFQ

V15H16-CZ100A02
Manufacturers: Honeywell Sensing and Productivity Solutions
Description: BASIC SWITCH V BASICS V15
In stock: 54671 pcs
RFQ

V15H16-CZ100A03
Manufacturers: Honeywell Sensing and Productivity Solutions
Description: BASIC SWITCH V BASICS V15
In stock: 54128 pcs
RFQ

V15H16-CZ100A02-K
Manufacturers: Honeywell Sensing and Productivity Solutions
Description: SWITCH SNAP ACTION SPDT 16A 250V
In stock: 23169 pcs
RFQ

V15H16-CP100A02-K
Manufacturers: Honeywell Sensing and Productivity Solutions
Description: SWITCH SNAP ACT SPST-NO 16A 250V
In stock: 3202 pcs
RFQ

V15H16-CP100
Manufacturers: Honeywell Sensing and Productivity Solutions
Description: BASIC SWITCH V BASICS V15
In stock: 71595 pcs
RFQ

V15H16-CZ100-K
Manufacturers: Honeywell Sensing and Productivity Solutions
Description: SWITCH SNAP ACTION SPDT 16A 250V
In stock: 29275 pcs
RFQ

V15H16-CZ100A03-K
Manufacturers: Honeywell Sensing and Productivity Solutions
Description: SWITCH SNAP ACTION SPDT 16A 250V
In stock: 21363 pcs
RFQ

Copyright © 2020 Reliable Distributor of Electronic Components

E-mail: Info@infinity-electronic.com
Address: 17F, Gaylord Commercial Building, 114-118 Lockhart Road, Wan Chai, Hong Kong