Honeywell | Honeywell Sensing and Productivity Solutions

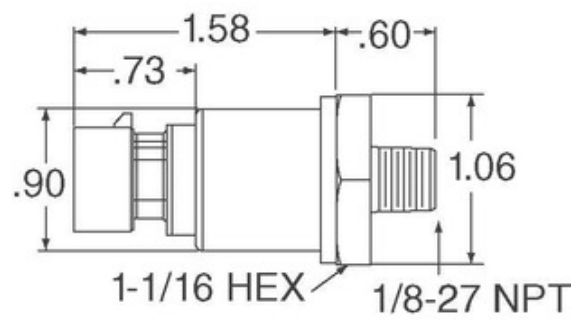

Image may be representation. See specifications for product details.

MLH200PSB01B

Part Number:	MLH200PSB01B
Manufacturer/Brand:	Honeywell Sensing and Productivity Solutions
Product description	SENSOR SEALED GAUGE 0-200 PSI
Datasheets:	1.MLH200PSB01B.pdf 2.MLH200PSB01B.pdf
RoHs Status	Lead free / RoHS Compliant
Stock Condition	1111 pcs stock
Ship From	Hong Kong
Shipment Way	DHL/Fedex/TNT/UPS/EMS

REQUEST FOR QUOTATION

Specifications of MLH200PSB01B

PART NUMBER	MLH200PSB01B
MANUFACTURER	Honeywell Sensing and Productivity Solutions
DESCRIPTION	SENSOR SEALED GAUGE 0-200 PSI
LEAD FREE STATUS / ROHS STATUS	Lead free / RoHS Compliant
QUANTITY AVAILABLE	1111 pcs
DATA SHEET	1.MLH200PSB01B.pdf 2.MLH200PSB01B.pdf
VOLTAGE - SUPPLY	9.5 V ~ 30 V
TERMINATION STYLE	Packard Metripak 150
SUPPLIER DEVICE PACKAGE	-
SERIES	MLH
PRESSURE TYPE	Sealed Gauge
PORT STYLE	Threaded
PORT SIZE	Male - 1/4" (6.35mm) NPT
PACKAGE / CASE	Cylinder, Metal
OUTPUT TYPE	Analog Current
OUTPUT	4 mA ~ 20 mA
OPERATING TEMPERATURE	-40°C ~ 125°C
OPERATING PRESSURE	200 PSI (1378.95 kPa)
MOISTURE SENSITIVITY LEVEL (MSL)	1 (Unlimited)
MAXIMUM PRESSURE	600 PSI (4136.85 kPa)
LEAD FREE STATUS / ROHS STATUS	Lead free / RoHS Compliant
FEATURES	Amplified Output, Temperature Compensated
DETAILED DESCRIPTION	Pressure Sensor 200 PSI (1378.95 kPa) Sealed Gauge Male - 1/4" (6.35mm) NPT 4 mA ~ 20 mA Cylinder, Metal
ACCURACY	±0.25%

Related Tags

Honeywell Sensing and Productivity Solutions MLH200PSB01B	MLH200PSB01B Distributor	MLH200PSB01B Supplier
MLH200PSB01B Price	MLH200PSB01B Pictures	MLH200PSB01B Image
MLH200PSB01B PDF Datasheet	MLH200PSB01B Download Datasheet	MLH200PSB01B Datasheet
MLH200PSB01B Stock	Buy MLH200PSB01B	Buy Honeywell Sensing and Productivity Solutions MLH200PSB01B
Honeywell Sensing and Productivity Solutions MLH200PSB01B	Honeywell Sensing and Productivity Solutions Supplier	Honeywell Sensing and Productivity Solutions Distributor
Honeywell Sensing and Productivity Solutions MLH200PSB01B	HONEYWELL MLH200PSB01B	Honeywell Sensing and Control EMEA MLH200PSB01B
Honeywell Sensing and Productivity Solutions T&M MLH200PSB01B		

Related Products

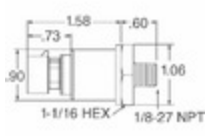

MLH200PGT06B
Manufacturers: Honeywell Sensing and Productivity Solutions
Description: MLH ALL METAL PRESS SENSE -ATF
In stock: 6364 pcs
RFQ

MLH200PGL01B
Manufacturers: Honeywell Sensing and Productivity Solutions
Description: SENSOR AMP 200PSI 4-20MA OUT
In stock: 875 pcs
RFQ

MLH200PSB06B
Manufacturers: Honeywell Sensing and Productivity Solutions
Description: SENSOR AMP 200PSI 4-20MA OUT
In stock: 951 pcs
RFQ

MLH200PGL06B
Manufacturers: Honeywell Sensing and Productivity Solutions
Description: MLH ALL METAL PRESS SENSE -ATF
In stock: 6480 pcs
RFQ

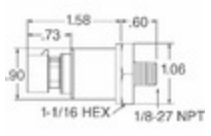

MLH200PSG06C
Manufacturers: Honeywell Sensing and Productivity Solutions
Description: SENSOR SEALED GAUGE 0-200 PSI
In stock: 803 pcs
RFQ

MLH200PGM09B
Manufacturers: Honeywell Sensing and Productivity Solutions
Description: SENSOR GAUGE 0-200 PSI
In stock: 2869 pcs
RFQ

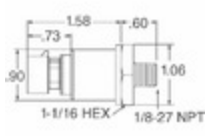

MLH200PSB09A
Manufacturers: Honeywell Sensing and Productivity Solutions
Description: MLH ALL METAL PRESS SENSE -ATF
In stock: 3168 pcs
RFQ

MLH200PSB09C
Manufacturers: Honeywell Sensing and Productivity Solutions
Description: SENSOR AMP 200PSI 1-6VDC OUT
In stock: 3866 pcs
RFQ

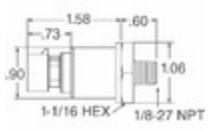

MLH200PGB06A
Manufacturers: Honeywell Sensing and Productivity Solutions
Description: MLH ALL METAL PRESS SENSE -ATF
In stock: 5640 pcs
RFQ

MLH200PSL01A
Manufacturers: Honeywell Sensing and Productivity Solutions
Description: SENSOR SEALED GAUGE 0-200 PSI
In stock: 761 pcs
RFQ

MLH200PSB06A
Manufacturers: Honeywell Sensing and Productivity Solutions
Description: SENSOR AMP 200PSI .5-4.5VDC OUT
In stock: 852 pcs
RFQ

MLH200PGL01A
Manufacturers: Honeywell Sensing and Productivity Solutions
Description: MLH ALL METAL PRESS SENSE -ATF
In stock: 1073 pcs
RFQ

Copyright © 2020 Reliable Distributor of Electronic Components

E-mail: Info@infinity-electronic.com
Address: 17F, Gaylord Commercial Building, 114-118 Lockhart Road, Wan Chai, Hong Kong