Honeywell | Honeywell Sensing and Productivity Solutions

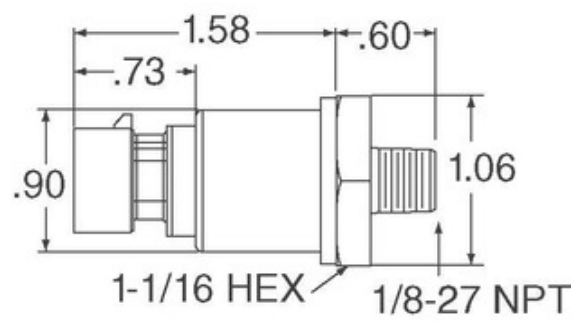

Image may be representation. See specifications for product details.

MLH100PSB06A

Part Number:	MLH100PSB06A
Manufacturer/Brand:	Honeywell Sensing and Productivity Solutions
Product description	SENSOR SEALED GAUGE 0-100 PSI
Datasheets:	1.MLH100PSB06A.pdf 2.MLH100PSB06A.pdf
RoHs Status	Lead free / RoHS Compliant
Stock Condition	1062 pcs stock
Ship From	Hong Kong
Shipment Way	DHL/Fedex/TNT/UPS/EMS

REQUEST FOR QUOTATION

Specifications of MLH100PSB06A

PART NUMBER	MLH100PSB06A
MANUFACTURER	Honeywell Sensing and Productivity Solutions
DESCRIPTION	SENSOR SEALED GAUGE 0-100 PSI
LEAD FREE STATUS / ROHS STATUS	Lead free / RoHS Compliant
QUANTITY AVAILABLE	1062 pcs
DATA SHEET	1.MLH100PSB06A.pdf 2.MLH100PSB06A.pdf
VOLTAGE - SUPPLY	5 V ~ 6 V
TERMINATION STYLE	Packard Metripak 150
SUPPLIER DEVICE PACKAGE	-
SERIES	MLH
PRESSURE TYPE	Sealed Gauge
PORT STYLE	Threaded
PORT SIZE	Male - 1/8" (3.18mm) NPT
PACKAGE / CASE	Cylinder, Metal
OUTPUT TYPE	Analog Voltage
OUTPUT	0.5 V ~ 4.5 V
OPERATING TEMPERATURE	-40°C ~ 125°C
OPERATING PRESSURE	100 PSI (689.48 kPa)
MOISTURE SENSITIVITY LEVEL (MSL)	1 (Unlimited)
MAXIMUM PRESSURE	300 PSI (2068.43 kPa)
LEAD FREE STATUS / ROHS STATUS	Lead free / RoHS Compliant
FEATURES	Amplified Output, Temperature Compensated
DETAILED DESCRIPTION	Pressure Sensor 100 PSI (689.48 kPa) Sealed Gauge Male - 1/8" (3.18mm) NPT 0.5 V ~ 4.5 V Cylinder, Metal
ACCURACY	±0.25%

Related Tags

Honeywell Sensing and Productivity Solutions MLH100PSB06A	MLH100PSB06A Distributor	MLH100PSB06A Supplier
MLH100PSB06A Price	MLH100PSB06A Pictures	MLH100PSB06A Image
MLH100PSB06A PDF Datasheet	MLH100PSB06A Download Datasheet	MLH100PSB06A Datasheet
MLH100PSB06A Stock	Buy MLH100PSB06A	Buy Honeywell Sensing and Productivity Solutions MLH100PSB06A
Honeywell Sensing and Productivity Solutions MLH100PSB06A	Honeywell Sensing and Productivity Solutions Supplier	Honeywell Sensing and Productivity Solutions Distributor
Honeywell Sensing and Productivity Solutions MLH100PSB06A	HONEYWELL MLH100PSB06A	Honeywell Sensing and Control EMEA MLH100PSB06A
Honeywell Sensing and Productivity Solutions T&M MLH100PSB06A		

Related Products

MLH100PSG06B
Manufacturers: Honeywell Sensing and Productivity Solutions
Description: SENSOR SEALED GAUGE 0-100 PSI
In stock: 4125 pcs
RFQ

MLH100PGP10A
Manufacturers: Honeywell Sensing and Productivity Solutions
Description: MLH ALL METAL PRESS SENSE -ATF
In stock: 3418 pcs
RFQ

MLH100PSCDJ1230
Manufacturers: Honeywell Sensing and Productivity Solutions
Description: MLH ALL METAL PRESS SENSE -ATF
In stock: 6635 pcs
RFQ

MLH100PGP06B
Manufacturers: Honeywell Sensing and Productivity Solutions
Description: SENSOR AMP 100PSI 4-20MA OUT
In stock: 820 pcs
RFQ

MLH100PSB06G
Manufacturers: Honeywell Sensing and Productivity Solutions
Description: MLH ALL METAL PRESS SENSE -ATF
In stock: 3518 pcs
RFQ

MLH100PGT10A
Manufacturers: Honeywell Sensing and Productivity Solutions
Description: MLH ALL METAL PRESS SENSE -ATF
In stock: 5490 pcs
RFQ

MLH100PSB01A
Manufacturers: Honeywell Sensing and Productivity Solutions
Description: SENSOR SEALED GAUGE 0-100 PSI
In stock: 958 pcs
RFQ

MLH100PGP06C
Manufacturers: Honeywell Sensing and Productivity Solutions
Description: SENSOR AMP 100PSI 1-6VDC OUT
In stock: 3330 pcs
RFQ

MLH100PSB01B
Manufacturers: Honeywell Sensing and Productivity Solutions
Description: SENSOR SEALED GAUGE 0-100 PSI
In stock: 1000 pcs
RFQ

MLH100PSB09A
Manufacturers: Honeywell Sensing and Productivity Solutions
Description: SENSOR SEALED GAUGE 0-100 PSI
In stock: 4785 pcs
RFQ

MLH100PSC06A
Manufacturers: Honeywell Sensing and Productivity Solutions
Description: MLH ALL METAL PRESS SENSE -ATF
In stock: 3458 pcs
RFQ

MLH100PSB10A
Manufacturers: Honeywell Sensing and Productivity Solutions
Description: MLH ALL METAL PRESS SENSE -ATF
In stock: 906 pcs
RFQ

Copyright © 2020 Reliable Distributor of Electronic Components
E-mail: Info@infinity-electronic.com
Address: 17F, Gaylord Commercial Building, 114-118 Lockhart Road, Wan Chai, Hong Kong