Diodes Incorporated

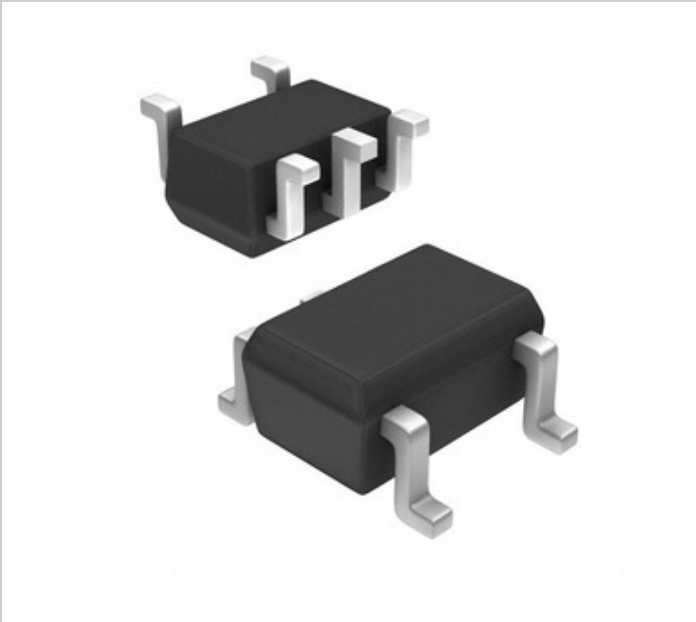

Image may be representation. See specifications for product details.

74AUP1G09SE-7

Part Number:	74AUP1G09SE-7
Manufacturer/Brand:	Diodes Incorporated
Product description	IC GATE AND 1CH 2-INP SOT-353
Datasheets:	74AUP1G09SE-7.pdf
RoHs Status	Lead free / RoHS Compliant
Stock Condition	455247 pcs stock
Ship From	Hong Kong
Shipment Way	DHL/Fedex/TNT/UPS/EMS

REQUEST FOR QUOTATION

Specifications of 74AUP1G09SE-7

PART NUMBER	74AUP1G09SE-7
MANUFACTURER	Diodes Incorporated
DESCRIPTION	IC GATE AND 1CH 2-INP SOT-353
LEAD FREE STATUS / ROHS STATUS	Lead free / RoHS Compliant
QUANTITY AVAILABLE	455247 pcs
DATA SHEET	74AUP1G09SE-7.pdf
VOLTAGE - BREAKDOWN	SOT-353
TIMING	-, 4mA
SHELL STYLE	0.8 V ~ 3.6 V
SERIES	74AUP
SCHMITT TRIGGER INPUT	1.6 V ~ 2 V
ROHS STATUS	Tape & Reel (TR)
RATIO - S/H:ADC	2
POLARIZATION	5-TSSOP, SC-70-5, SOT-353
OTHER NAMES	74AUP1G09SE-7DITR 74AUP1G09SE7
ORIENTATION	1
OPERATING TEMPERATURE	-40°C ~ 125°C
NUMBER OF BITS PER ELEMENT	AND Gate
MOUNTING TYPE	Surface Mount
MOISTURE SENSITIVITY LEVEL (MSL)	1 (Unlimited)
MANUFACTURER PART NUMBER	74AUP1G09SE-7
LOGIC LEVEL - HIGH	0.7 V ~ 0.9 V
FEATURES	Open Drain
EXPANDED DESCRIPTION	AND Gate IC 1 Channel Open Drain SOT-353
DESCRIPTION	IC GATE AND 1CH 2-INP SOT-353
CURRENT - QUIESCENT	12.7ns @ 3.3V, 30pF
CMRR, PSRR (TYP)	0.5µA

Related Tags

Diodes Incorporated 74AUP1G09SE-7	74AUP1G09SE-7 Distributor	74AUP1G09SE-7 Supplier
74AUP1G09SE-7 Price	74AUP1G09SE-7 Pictures	74AUP1G09SE-7 Image
74AUP1G09SE-7 PDF Datasheet	74AUP1G09SE-7 Download Datasheet	74AUP1G09SE-7 Datasheet
74AUP1G09SE-7 Stock	Buy 74AUP1G09SE-7	Buy Diodes Incorporated 74AUP1G09SE-7
Diodes Incorporated 74AUP1G09SE-7	Diodes Incorporated Supplier	Diodes Incorporated Distributor
Diodes Incorporated 74AUP1G09SE-7	Diodes Inc 74AUP1G09SE-7	Pericom Semiconductor 74AUP1G09SE-7
Zetex Semiconductors (Diodes Incorporated) 74AUP1G09SE-7		

Related Products

74AUP1G11GM,132
Manufacturers: Nexperia
Description: IC GATE AND 1CH 3-INP 6XSON
In stock: 1255153 pcs
RFQ

74AUP1G11GF,132
Manufacturers: Nexperia
Description: IC GATE AND 1CH 3-INP 6XSON
In stock: 342676 pcs
RFQ

74AUP1G11GM,115
Manufacturers: Nexperia
Description: IC GATE AND 1CH 3-INP 6XSON
In stock: 515619 pcs
RFQ

74AUP1G09GM,115
Manufacturers: Nexperia
Description: IC GATE AND OD 1CH 2-INP 6XSON
In stock: 208235 pcs
RFQ

74AUP1G09SE-7
Manufacturers: Diodes Incorporated
Description: IC GATE AND 1CH 2-INP SOT353
In stock: 458763 pcs
RFQ

74AUP1G09GM,132
Manufacturers: Nexperia
Description: IC GATE AND OD 1CH 2-INP 6XSON
In stock: 161874 pcs
RFQ

74AUP1G09GW,125
Manufacturers: Nexperia
Description: IC GATE AND 1CH 2-INP 5TSSOP
In stock: 978328 pcs
RFQ

74AUP1G11GN,132
Manufacturers: Nexperia
Description: IC GATE AND 1CH 3-INP 6XSON
In stock: 572219 pcs
RFQ

74AUP1G09GS,132
Manufacturers: Nexperia
Description: IC GATE AND OD 1CH 2-INP 6XSON
In stock: 986664 pcs
RFQ

74AUP1G09GX,125
Manufacturers: Nexperia
Description: IC GATE AND OD 1CH 2-INP 4SON
In stock: 1089869 pcs
RFQ

74AUP1G11GS,132
Manufacturers: Nexperia
Description: IC GATE AND 1CH 3-INP 6XSON
In stock: 793801 pcs
RFQ

74AUP1G09GN,132
Manufacturers: Nexperia
Description: IC GATE AND OD 1CH 2-INP 6XSON
In stock: 660591 pcs
RFQ

Copyright © 2020 Reliable Distributor of Electronic Components

E-mail: Info@infinity-electronic.com
Address: 17F, Gaylord Commercial Building, 114-118 Lockhart Road, Wan Chai, Hong Kong