Diodes Incorporated

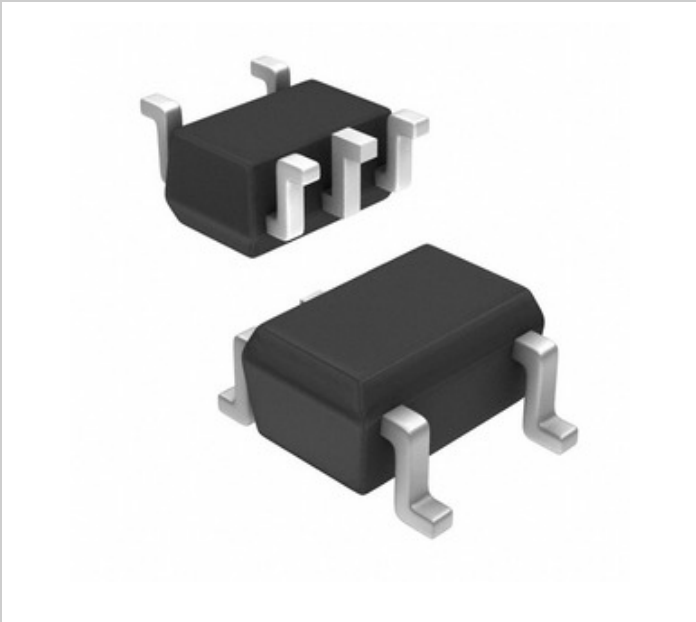

Image may be representation. See specifications for product details.

74AHC1G32SE-7

Part Number:	74AHC1G32SE-7
Manufacturer/Brand:	Diodes Incorporated
Product description	IC GATE OR 1CH 2-INP SOT353
Datasheets:	74AHC1G32SE-7.pdf
RoHs Status	Lead free / RoHS Compliant
Stock Condition	2091527 pcs stock
Ship From	Hong Kong
Shipment Way	DHL/Fedex/TNT/UPS/EMS

REQUEST FOR QUOTATION

Specifications of 74AHC1G32SE-7

PART NUMBER	74AHC1G32SE-7
MANUFACTURER	Diodes Incorporated
DESCRIPTION	IC GATE OR 1CH 2-INP SOT353
LEAD FREE STATUS / ROHS STATUS	Lead free / RoHS Compliant
QUANTITY AVAILABLE	2091527 pcs
DATA SHEET	74AHC1G32SE-7.pdf
VOLTAGE - SUPPLY	2 V ~ 5.5 V
SUPPLIER DEVICE PACKAGE	SOT-353
SERIES	74AHC
PACKAGING	Tape & Reel (TR)
PACKAGE / CASE	5-TSSOP, SC-70-5, SOT-353
OTHER NAMES	74AHC1G32SE-7DITR 74AHC1G32SE7
OPERATING TEMPERATURE	-40°C ~ 125°C
NUMBER OF INPUTS	2
NUMBER OF CIRCUITS	1
MOUNTING TYPE	Surface Mount
MOISTURE SENSITIVITY LEVEL (MSL)	1 (Unlimited)
MAX PROPAGATION DELAY @ V, MAX CL	7.5ns @ 5V, 50pF
LOGIC TYPE	OR Gate
LOGIC LEVEL - LOW	0.5 V ~ 1.65 V
LOGIC LEVEL - HIGH	1.5 V ~ 3.85 V
LEAD FREE STATUS / ROHS STATUS	Lead free / RoHS Compliant
FEATURES	-
DETAILED DESCRIPTION	OR Gate IC 1 Channel SOT-353
CURRENT - QUIESCENT (MAX)	1µA
CURRENT - OUTPUT HIGH, LOW	8mA, 8mA
BASE PART NUMBER	74AHC1G32

Related Tags

Diodes Incorporated 74AHC1G32SE-7	74AHC1G32SE-7 Distributor	74AHC1G32SE-7 Supplier
74AHC1G32SE-7 Price	74AHC1G32SE-7 Pictures	74AHC1G32SE-7 Image
74AHC1G32SE-7 PDF Datasheet	74AHC1G32SE-7 Download Datasheet	74AHC1G32SE-7 Datasheet
74AHC1G32SE-7 Stock	Buy 74AHC1G32SE-7	Buy Diodes Incorporated 74AHC1G32SE-7
Diodes Incorporated 74AHC1G32SE-7	Diodes Incorporated Supplier	Diodes Incorporated Distributor
Diodes Incorporated 74AHC1G32SE-7	Diodes Inc 74AHC1G32SE-7	Pericom Semiconductor 74AHC1G32SE-7
Zetex Semiconductors (Diodes Incorporated) 74AHC1G32SE-7		

Related Products

74AHC1G66GV,125
Manufacturers: Nexperia
Description: IC SWITCH SPST 5TSOP
In stock: 266480 pcs
RFQ

74AHC1G32GW,165
Manufacturers: Nexperia
Description: IC GATE OR 1CH 2-INP 5TSSOP
In stock: 7024 pcs
RFQ

74AHC1G4210GWH
Manufacturers: Nexperia
Description: 74AHC1G4210GW/SOT353/UMT5
In stock: 624098 pcs
RFQ

74AHC1G32GV-Q100,1
Manufacturers: Nexperia
Description: IC GATE OR 1CH 2-INP 5TSOP
In stock: 1565199 pcs
RFQ

74AHC1G4212GWH
Manufacturers: Nexperia
Description: 74AHC1G4212GW/SOT353/UMT5
In stock: 552491 pcs
RFQ

74AHC1G4214GWH
Manufacturers: Nexperia
Description: 74AHC1G4214GW/SOT353/UMT5
In stock: 592996 pcs
RFQ

74AHC1G66GV-Q100H
Manufacturers: Nexperia
Description: IC ANALOG SWITCH SPST 5TSOP
In stock: 1726559 pcs
RFQ

74AHC1G32GW,125
Manufacturers: Nexperia
Description: IC GATE OR 1CH 2-INP 5TSSOP
In stock: 377900 pcs
RFQ

74AHC1G32W5-7
Manufacturers: Diodes Incorporated
Description: IC GATE OR 1CH 2-INP SOT25
In stock: 1995478 pcs
RFQ

74AHC1G32GW-Q100,1
Manufacturers: Nexperia
Description: IC GATE OR 1CH 2-INP 5TSSOP
In stock: 1875849 pcs
RFQ

74AHC1G17GWH
Manufacturers: Nexperia
Description: IC BUF NON-INVERT 5.5V 5TSSOP
In stock: 847380 pcs
RFQ

74AHC1G32GV,125
Manufacturers: Nexperia
Description: IC GATE OR 1CH 2-INP 5TSOP
In stock: 1404114 pcs
RFQ

Copyright © 2020 Reliable Distributor of Electronic Components

E-mail: Info@infinity-electronic.com
Address: 17F, Gaylord Commercial Building, 114-118 Lockhart Road, Wan Chai, Hong Kong