Honeywell | Honeywell Sensing and Productivity Solutions

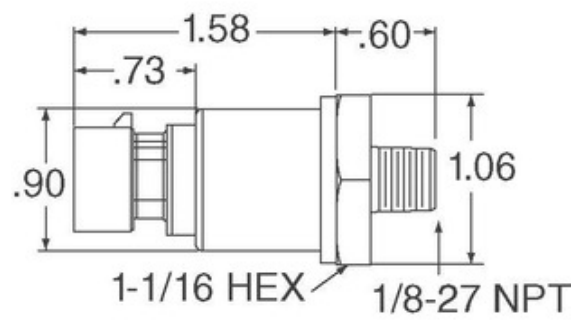

Image may be representation. See specifications for product details.

MLH100PGP01A

Part Number:	MLH100PGP01A
Manufacturer/Brand:	Honeywell Sensing and Productivity Solutions
Product description	MLH ALL METAL PRESS SENSE -ATF
Datasheets:	1.MLH100PGP01A.pdf 2.MLH100PGP01A.pdf
RoHs Status	Lead free / RoHS Compliant
Stock Condition	3703 pcs stock
Ship From	Hong Kong
Shipment Way	DHL/Fedex/TNT/UPS/EMS

REQUEST FOR QUOTATION

Specifications of MLH100PGP01A

PART NUMBER	MLH100PGP01A
MANUFACTURER	Honeywell Sensing and Productivity Solutions
DESCRIPTION	MLH ALL METAL PRESS SENSE -ATF
LEAD FREE STATUS / ROHS STATUS	Lead free / RoHS Compliant
QUANTITY AVAILABLE	3703 pcs
DATA SHEET	1.MLH100PGP01A.pdf 2.MLH100PGP01A.pdf
VOLTAGE - SUPPLY	5 V ~ 6 V
SUPPLIER DEVICE PACKAGE	-
SERIES	MLH
PRESSURE TYPE	Vented Gauge
PORT STYLE	Threaded
PORT SIZE	Male - 1/4" (6.35mm) NPT
PACKAGE / CASE	Cylinder, Metal
OUTPUT TYPE	Analog Voltage
OUTPUT	0.5 V ~ 4.5 V
OPERATING TEMPERATURE	-40°C ~ 125°C
OPERATING PRESSURE	100 PSI (689.48 kPa)
MOISTURE SENSITIVITY LEVEL (MSL)	1 (Unlimited)
MAXIMUM PRESSURE	300 PSI (2068.43 kPa)
LEAD FREE STATUS / ROHS STATUS	Lead free / RoHS Compliant
FEATURES	Amplified Output, Temperature Compensated
DETAILED DESCRIPTION	Pressure Sensor 100 PSI (689.48 kPa) Vented Gauge Male - 1/4" (6.35mm) NPT 0.5 V ~ 4.5 V Cylinder, Metal
ACCURACY	±0.25%

Related Tags

- Honeywell Sensing and Productivity Solutions MLH100PGP01A
- MLH100PGP01A Distributor
- MLH100PGP01A Supplier
- MLH100PGP01A Price
- MLH100PGP01A Pictures
- MLH100PGP01A Image
- MLH100PGP01A PDF Datasheet
- MLH100PGP01A Download Datasheet
- MLH100PGP01A Datasheet
- MLH100PGP01A Stock
- Buy MLH100PGP01A
- Buy Honeywell Sensing and Productivity Solutions MLH100PGP01A
- Honeywell Sensing and Productivity Solutions MLH100PGP01A
- Honeywell Sensing and Productivity Solutions Supplier
- Honeywell Sensing and Productivity Solutions Distributor
- Honeywell Sensing and Productivity Solutions MLH100PGP01A
- HONEYWELL MLH100PGP01A
- Honeywell Sensing and Control EMEA MLH100PGP01A
- Honeywell Sensing and Productivity Solutions T&M MLH100PGP01A

Related Products

MLH100PGL06B
Manufacturers: Honeywell Sensing and Productivity Solutions
Description: SENSOR AMP 100PSI 4-20MA OUT
In stock: 859 pcs
RFQ

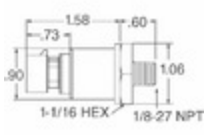

MLH100PSB01B
Manufacturers: Honeywell Sensing and Productivity Solutions
Description: SENSOR SEALED GAUGE 0-100 PSI
In stock: 1000 pcs
RFQ

MLH100PGP06C
Manufacturers: Honeywell Sensing and Productivity Solutions
Description: SENSOR AMP 100PSI 1-6VDC OUT
In stock: 3330 pcs
RFQ

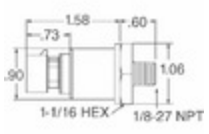

MLH100PGP10A
Manufacturers: Honeywell Sensing and Productivity Solutions
Description: MLH ALL METAL PRESS SENSE -ATF
In stock: 3418 pcs
RFQ

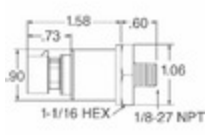

MLH100PGT10A
Manufacturers: Honeywell Sensing and Productivity Solutions
Description: MLH ALL METAL PRESS SENSE -ATF
In stock: 5490 pcs
RFQ

MLH100PGM01B
Manufacturers: Honeywell Sensing and Productivity Solutions
Description: SENSOR AMP 100PSI 4-20MA OUT
In stock: 610 pcs
RFQ

MLH100PSB01A
Manufacturers: Honeywell Sensing and Productivity Solutions
Description: SENSOR SEALED GAUGE 0-100 PSI
In stock: 958 pcs
RFQ

MLH100PGM06B
Manufacturers: Honeywell Sensing and Productivity Solutions
Description: SENSOR AMP 100PSI 4-20MA OUT
In stock: 656 pcs
RFQ

MLH100PGL09B
Manufacturers: Honeywell Sensing and Productivity Solutions
Description: SENSOR AMP 100PSI 4-20MA OUT
In stock: 670 pcs
RFQ

MLH100PGM06C
Manufacturers: Honeywell Sensing and Productivity Solutions
Description: SENSOR AMP 100PSI 1-6VDC OUT
In stock: 567 pcs
RFQ

MLH100PGL06C
Manufacturers: Honeywell Sensing and Productivity Solutions
Description: SENSOR AMP 100PSI 1-6VDC OUT
In stock: 683 pcs
RFQ

MLH100PGP06B
Manufacturers: Honeywell Sensing and Productivity Solutions
Description: SENSOR AMP 100PSI 4-20MA OUT
In stock: 820 pcs
RFQ

Copyright © 2020 Reliable Distributor of Electronic Components

E-mail: Info@infinity-electronic.com
Address: 17F, Gaylord Commercial Building, 114-118 Lockhart Road, Wan Chai, Hong Kong