Panasonic | Panasonic

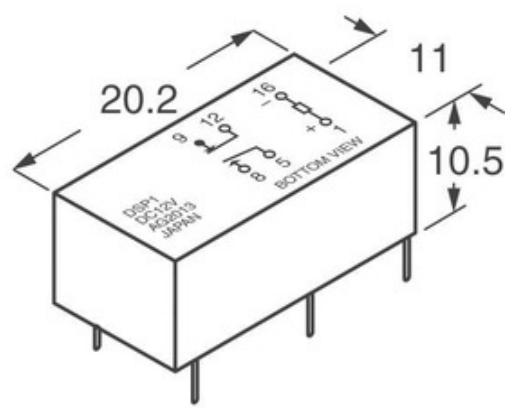

Image may be representation. See specifications for product details.

DSP1-DC48V-F

Part Number:	DSP1-DC48V-F
Manufacturer/Brand:	Panasonic
Product description	DSP RELAY 1 FORM A/B 48V
Datasheets:	DSP1-DC48V-F.pdf
RoHs Status	Lead free / RoHS Compliant
Stock Condition	11768 pcs stock
Ship From	Hong Kong
Shipment Way	DHL/Fedex/TNT/UPS/EMS

REQUEST FOR QUOTATION

Specifications of DSP1-DC48V-F

PART NUMBER	DSP1-DC48V-F
MANUFACTURER	Panasonic
DESCRIPTION	DSP RELAY 1 FORM A/B 48V
LEAD FREE STATUS / ROHS STATUS	Lead free / RoHS Compliant
QUANTITY AVAILABLE	11768 pcs
DATA SHEET	DSP1-DC48V-F.pdf
SERIES	*
MOISTURE SENSITIVITY LEVEL (MSL)	1 (Unlimited)
LEAD FREE STATUS / ROHS STATUS	Lead free / RoHS Compliant
DETAILED DESCRIPTION	Relay Coil

Related Tags

Panasonic DSP1-DC48V-F	DSP1-DC48V-F Distributor	DSP1-DC48V-F Supplier
DSP1-DC48V-F Price	DSP1-DC48V-F Pictures	DSP1-DC48V-F Image
DSP1-DC48V-F PDF Datasheet	DSP1-DC48V-F Download Datasheet	DSP1-DC48V-F Datasheet
DSP1-DC48V-F Stock	Buy DSP1-DC48V-F	Buy Panasonic DSP1-DC48V-F
Panasonic DSP1-DC48V-F	Panasonic Supplier	Panasonic Distributor
Panasonic DSP1-DC48V-F	Panasonic - Consumer Division DSP1-DC48V-F	Panasonic - Consumer Electronics Corp. DSP1-DC48V-F
Panasonic Battery Group DSP1-DC48V-F	Panasonic Electric Works - ACSD DSP1-DC48V-F	Panasonic Electronic Components - Semiconductor Pr DSP1-DC48V-F
Panasonic - ATG DSP1-DC48V-F	Panasonic - BSG DSP1-DC48V-F	Panasonic - DTG DSP1-DC48V-F
Panasonic Electric Works DSP1-DC48V-F	Panasonic Electronic Components DSP1-DC48V-F	Panasonic Industrial Automation Sales DSP1-DC48V-F
Panasonic Semiconductor DSP1-DC48V-F		

Related Products

DSP1-DC5V
Manufacturers: Panasonic
Description: RELAY GENERAL PURPOSE DPST 5A 5V
In stock: 4396 pcs
RFQ

DSP1-DC6V
Manufacturers: Panasonic
Description: RELAY GENERAL PURPOSE DPST 5A 6V
In stock: 4205 pcs
RFQ

DSP1-DC3V-F
Manufacturers: Panasonic
Description: RELAY GENERAL PURPOSE DPST 5A 3V
In stock: 13777 pcs
RFQ

DSP1-DC5V-R-F
Manufacturers: Panasonic
Description: DSP RELAY 1 FORM A/B 5V REV POL
In stock: 12372 pcs
RFQ

DSP1-DC5V-F
Manufacturers: Panasonic
Description: RELAY GENERAL PURPOSE DPST 5A 5V
In stock: 12954 pcs
RFQ

DSP1-DC24V-R
Manufacturers: Panasonic
Description: RELAY GEN PURPOSE DPST 5A 24V
In stock: 5094 pcs
RFQ

DSP1-DC24V-F
Manufacturers: Panasonic
Description: RELAY GEN PURPOSE DPST 5A 24V
In stock: 11263 pcs
RFQ

DSP1-DC24V-R-F
Manufacturers: Panasonic
Description: RELAY GEN PURPOSE DPST 5A 24V
In stock: 11099 pcs
RFQ

DSP1-DC6V-F
Manufacturers: Panasonic
Description: RELAY GENERAL PURPOSE DPST 5A 6V
In stock: 11048 pcs
RFQ

DSP1-DC3V
Manufacturers: Panasonic
Description: RELAY GENERAL PURPOSE DPST 5A 3V
In stock: 3528 pcs
RFQ

DSP1-DC48V
Manufacturers: Panasonic
Description: RELAY GEN PURPOSE DPST 5A 48V
In stock: 5354 pcs
RFQ

DSP1-DC5V-R
Manufacturers: Panasonic
Description: RELAY GENERAL PURPOSE DPST 5A 5V
In stock: 5038 pcs
RFQ

Copyright © 2020 Reliable Distributor of Electronic Components
E-mail: Info@infinity-electronic.com
Address: 17F, Gaylord Commercial Building, 114-118 Lockhart Road, Wan Chai, Hong Kong