Honeywell | Honeywell Sensing and Productivity Solutions

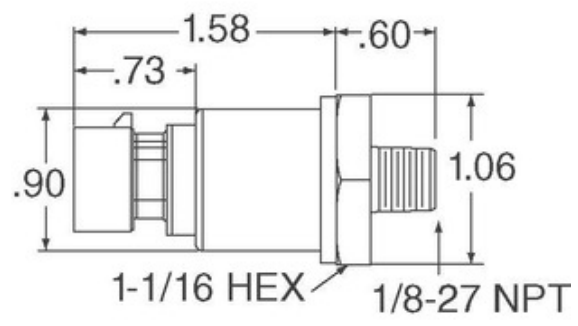


Image may be representation. See specifications for product details.

# MLH350BST13E

| | |
|---|---|
| Part Number: | MLH350BST13E |
| Manufacturer/Brand: | Honeywell Sensing and Productivity Solutions |
| Product description | MLH ALL METAL PRESS SENSE -ATF |
| Datasheets: | 1.MLH350BST13E.pdf<br>2.MLH350BST13E.pdf |
| RoHs Status | Lead free / RoHS Compliant |
| Stock Condition | 3234 pcs stock |
| Ship From | Hong Kong |
| Shipment Way | DHL/Fedex/TNT/UPS/EMS |

**REQUEST FOR QUOTATION**

## Specifications of MLH350BST13E

| | |
|---|---|
| PART NUMBER | MLH350BST13E |
| MANUFACTURER | Honeywell Sensing and Productivity Solutions |
| DESCRIPTION | MLH ALL METAL PRESS SENSE -ATF |
| LEAD FREE STATUS / ROHS STATUS | Lead free / RoHS Compliant |
| QUANTITY AVAILABLE | 3234 pcs |
| DATA SHEET | 1.MLH350BST13E.pdf<br>2.MLH350BST13E.pdf |
| VOLTAGE - SUPPLY | 7 V ~ 30 V |
| SUPPLIER DEVICE PACKAGE | - |
| SERIES | MLH |
| PRESSURE TYPE | Sealed Gauge |
| PORT STYLE | Threaded |
| PORT SIZE | Male - 1/4" (6.35mm) BSPT |
| PACKAGE / CASE | Cylinder, Metal |
| OUTPUT TYPE | Analog Voltage |
| OUTPUT | 0.5 V ~ 4.5 V |
| OPERATING TEMPERATURE | -40°C ~ 125°C |
| OPERATING PRESSURE | 5076.32 PSI (35000 kPa) |
| MOISTURE SENSITIVITY LEVEL (MSL) | 1 (Unlimited) |
| MAXIMUM PRESSURE | 10152.64 PSI (70000 kPa) |
| LEAD FREE STATUS / ROHS STATUS | Lead free / RoHS Compliant |
| FEATURES | Amplified Output, Temperature Compensated |
| DETAILED DESCRIPTION | Pressure Sensor 5076.32 PSI (35000 kPa) Sealed Gauge Male - 1/4" (6.35mm) BSPT 0.5 V ~ 4.5 V Cylinder, Metal |
| ACCURACY | ±0.25% |

## Related Tags

- Honeywell Sensing and Productivity Solutions MLH350BST13E
- MLH350BST13E Distributor
- MLH350BST13E Supplier
- MLH350BST13E Price
- MLH350BST13E Pictures
- MLH350BST13E Image
- MLH350BST13E PDF Datasheet
- MLH350BST13E Download Datasheet
- MLH350BST13E Datasheet
- MLH350BST13E Stock
- Buy MLH350BST13E
- Buy Honeywell Sensing and Productivity Solutions MLH350BST13E
- Honeywell Sensing and Productivity Solutions MLH350BST13E
- Honeywell Sensing and Productivity Solutions Supplier
- Honeywell Sensing and Productivity Solutions Distributor
- Honeywell Sensing and Productivity Solutions MLH350BST13E
- HONEYWELL MLH350BST13E
- Honeywell Sensing and Control EMEA MLH350BST13E
- Honeywell Sensing and Productivity Solutions T&M MLH350BST13E

## Related Products

### MLH350BSL01A
Manufacturers: Honeywell Sensing and Productivity Solutions
Description: MLH ALL METAL PRESS SENSE -ATF
In stock: 5476 pcs
RFQ

### MLH350BSL07E
Manufacturers: Honeywell Sensing and Productivity Solutions
Description: MLH ALL METAL PRESS SENSE -ATF
In stock: 848 pcs
RFQ

### MLH400BSB01D
Manufacturers: Honeywell Sensing and Productivity Solutions
Description: MLH ALL METAL PRESS SENSE -ATF
In stock: 3860 pcs
RFQ

### MLH350BSL14A
Manufacturers: Honeywell Sensing and Productivity Solutions
Description: MLH ALL METAL PRESS SENSE -ATF
In stock: 863 pcs
RFQ

### MLH400PSB06G
Manufacturers: Honeywell Sensing and Productivity Solutions
Description: SENSOR SEALED GAUGE 0-400 PSI
In stock: 5926 pcs
RFQ

### MLH350PSB09A
Manufacturers: Honeywell Sensing and Productivity Solutions
Description: MLH ALL METAL PRESS SENSE -ATF
In stock: 3067 pcs
RFQ

### MLH350BST12E
Manufacturers: Honeywell Sensing and Productivity Solutions
Description: MLH ALL METAL PRESS SENSE -ATF
In stock: 966 pcs
RFQ

### MLH400BSB01B
Manufacturers: Honeywell Sensing and Productivity Solutions
Description: MLH ALL METAL PRESS SENSE -ATF
In stock: 1107 pcs
RFQ

### MLH500BSB14A
Manufacturers: Honeywell Sensing and Productivity Solutions
Description: SENSOR SEALED GAUGE 0-500 BAR
In stock: 6569 pcs
RFQ

### MLH350BST07E
Manufacturers: Honeywell Sensing and Productivity Solutions
Description: MLH ALL METAL PRESS SENSE -ATF
In stock: 916 pcs
RFQ

### MLH350BSL15E
Manufacturers: Honeywell Sensing and Productivity Solutions
Description: SENSOR SEALED GAUGE 0-350 BAR
In stock: 4519 pcs
RFQ

### MLH400BSB01A
Manufacturers: Honeywell Sensing and Productivity Solutions
Description: MLH ALL METAL PRESS SENSE -ATF
In stock: 3106 pcs
RFQ

**Copyright © 2020 Reliable Distributor of Electronic Components**

E-mail: Info@infinity-electronic.com
Address: 17F, Gaylord Commercial Building, 114-118 Lockhart Road, Wan Chai, Hong Kong