Honeywell | Honeywell Sensing and Productivity Solutions

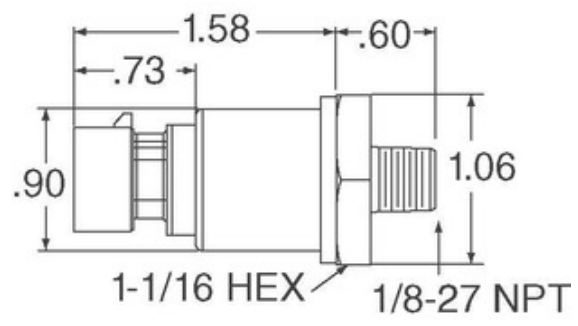

Image may be representation. See specifications for product details.

MLH150PGD01E

Part Number:	MLH150PGD01E
Manufacturer/Brand:	Honeywell Sensing and Productivity Solutions
Product description	MLH ALL METAL PRESS SENSE -ATF
Datasheets:	1.MLH150PGD01E.pdf 2.MLH150PGD01E.pdf
RoHs Status	Lead free / RoHS Compliant
Stock Condition	6598 pcs stock
Ship From	Hong Kong
Shipment Way	DHL/Fedex/TNT/UPS/EMS

REQUEST FOR QUOTATION

Specifications of MLH150PGD01E

PART NUMBER	MLH150PGD01E
MANUFACTURER	Honeywell Sensing and Productivity Solutions
DESCRIPTION	MLH ALL METAL PRESS SENSE -ATF
LEAD FREE STATUS / ROHS STATUS	Lead free / RoHS Compliant
QUANTITY AVAILABLE	6598 pcs
DATA SHEET	1.MLH150PGD01E.pdf 2.MLH150PGD01E.pdf
VOLTAGE - SUPPLY	7 V ~ 30 V
SUPPLIER DEVICE PACKAGE	-
SERIES	MLH
PRESSURE TYPE	Vented Gauge
PORT STYLE	Threaded
PORT SIZE	Male - 1/4" (6.35mm) NPT
PACKAGE / CASE	Cylinder, Metal
OUTPUT TYPE	Analog Voltage
OUTPUT	0.5 V ~ 4.5 V
OPERATING TEMPERATURE	-40°C ~ 125°C
OPERATING PRESSURE	150 PSI (1034.21 kPa)
MOISTURE SENSITIVITY LEVEL (MSL)	1 (Unlimited)
MAXIMUM PRESSURE	450 PSI (3102.64 kPa)
LEAD FREE STATUS / ROHS STATUS	Lead free / RoHS Compliant
FEATURES	Amplified Output, Temperature Compensated
DETAILED DESCRIPTION	Pressure Sensor 150 PSI (1034.21 kPa) Vented Gauge Male - 1/4" (6.35mm) NPT 0.5 V ~ 4.5 V Cylinder, Metal
ACCURACY	±0.25%

Related Tags

- Honeywell Sensing and Productivity Solutions MLH150PGD01E
- MLH150PGD01E Distributor
- MLH150PGD01E Supplier
- MLH150PGD01E Price
- MLH150PGD01E Pictures
- MLH150PGD01E Image
- MLH150PGD01E PDF Datasheet
- MLH150PGD01E Download Datasheet
- MLH150PGD01E Datasheet
- MLH150PGD01E Stock
- Buy MLH150PGD01E
- Buy Honeywell Sensing and Productivity Solutions MLH150PGD01E
- Honeywell Sensing and Productivity Solutions MLH150PGD01E
- Honeywell Sensing and Productivity Solutions Supplier
- Honeywell Sensing and Productivity Solutions Distributor
- Honeywell Sensing and Productivity Solutions MLH150PGD01E
- HONEYWELL MLH150PGD01E
- Honeywell Sensing and Control EMEA MLH150PGD01E
- Honeywell Sensing and Productivity Solutions T&M MLH150PGD01E

Related Products

MLH150PGB06A
Manufacturers: Honeywell Sensing and Productivity Solutions
Description: SENSOR AMP 150PSI .5-4.5VDC OUT
In stock: 972 pcs
RFQ

MLH150PGL04G
Manufacturers: Honeywell Sensing and Productivity Solutions
Description: SENSOR AMP 150PSI 1-5VDC OUT
In stock: 822 pcs
RFQ

MLH150PGB01A
Manufacturers: Honeywell Sensing and Productivity Solutions
Description: SENSOR AMP 150PSI .5-4.5VDC OUT
In stock: 876 pcs
RFQ

MLH150PGM01B
Manufacturers: Honeywell Sensing and Productivity Solutions
Description: MLH ALL METAL PRESS SENSE -ATF
In stock: 775 pcs
RFQ

MLH150PGB06G
Manufacturers: Honeywell Sensing and Productivity Solutions
Description: SENSOR AMP 150PSI 1-5VDC OUT
In stock: 673 pcs
RFQ

MLH150PGL06G
Manufacturers: Honeywell Sensing and Productivity Solutions
Description: MLH ALL METAL PRESS SENSE -ATF
In stock: 796 pcs
RFQ

MLH150PGL06B
Manufacturers: Honeywell Sensing and Productivity Solutions
Description: SENSOR AMP 150PSI 4-20MA OUT
In stock: 706 pcs
RFQ

MLH150PAB01A
Manufacturers: Honeywell Sensing and Productivity Solutions
Description: SENSOR AMP 150PSI .5-4.5VDC OUT
In stock: 4252 pcs
RFQ

MLH150PGL01C
Manufacturers: Honeywell Sensing and Productivity Solutions
Description: MLH ALL METAL PRESS SENSE -ATF
In stock: 861 pcs
RFQ

MLH150PGB01B
Manufacturers: Honeywell Sensing and Productivity Solutions
Description: SENSOR AMP 150PSI 4-20MA OUT
In stock: 959 pcs
RFQ

MLH150PGL06A
Manufacturers: Honeywell Sensing and Productivity Solutions
Description: MLH ALL METAL PRESS SENSE -ATF
In stock: 2806 pcs
RFQ

MLH150PGB06B
Manufacturers: Honeywell Sensing and Productivity Solutions
Description: SENSOR AMP 150PSI 4-20MA OUT
In stock: 2726 pcs
RFQ

Copyright © 2020 Reliable Distributor of Electronic Components

E-mail: Info@infinity-electronic.com
Address: 17F, Gaylord Commercial Building, 114-118 Lockhart Road, Wan Chai, Hong Kong