Honeywell | Honeywell Sensing and Productivity Solutions

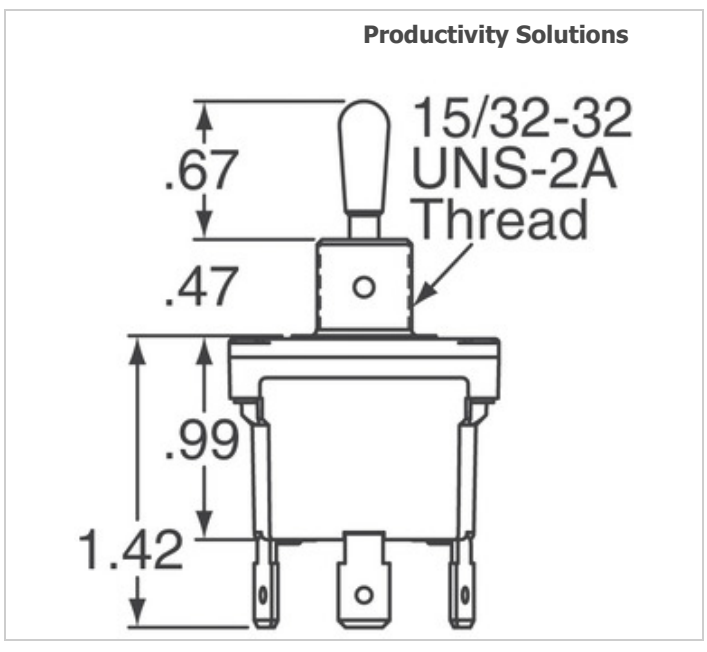

Image may be representation. See specifications for product details.

32NT91-7E

Part Number:	32NT91-7E
Manufacturer/Brand:	Honeywell Sensing and Productivity Solutions
Product description	SWITCH TOGGLE DPDT 10A 125V
Datasheets:	1.32NT91-7E.pdf 2.32NT91-7E.pdf 3.32NT91-7E.pdf
RoHs Status	Lead free / RoHS Compliant
Stock Condition	2403 pcs stock
Ship From	Hong Kong
Shipment Way	DHL/Fedex/TNT/UPS/EMS

REQUEST FOR QUOTATION

Specifications of 32NT91-7E

PART NUMBER	32NT91-7E
MANUFACTURER	Honeywell Sensing and Productivity Solutions
DESCRIPTION	SWITCH TOGGLE DPDT 10A 125V
LEAD FREE STATUS / ROHS STATUS	Lead free / RoHS Compliant
QUANTITY AVAILABLE	2403 pcs
DATA SHEET	1.32NT91-7E.pdf 2.32NT91-7E.pdf 3.32NT91-7E.pdf
VOLTAGE RATING - AC	125V
TERMINATION STYLE	Quick Connect - 0.250" (6.3mm)
SWITCH FUNCTION	Mom-Off-Mom
SERIES	NT
PANEL CUTOUT DIMENSIONS	Circular - 12.40mm Dia
PACKAGING	Bulk
OPERATING TEMPERATURE	-40°C ~ 71°C
MOUNTING TYPE	Panel Mount
MOISTURE SENSITIVITY LEVEL (MSL)	1 (Unlimited)
LEAD FREE STATUS / ROHS STATUS	Lead free / RoHS Compliant
INGRESS PROTECTION	IP67/68 - Dust Tight, Waterproof
ILLUMINATION VOLTAGE (NOMINAL)	-
ILLUMINATION TYPE, COLOR	-
ILLUMINATION	Non-Illuminated
FEATURES	Sealed
ELECTRICAL LIFE	-
DETAILED DESCRIPTION	Toggle Switch DPDT Panel Mount
CURRENT RATING	10A (AC)
CIRCUIT	DPDT
BUSHING THREAD	15/32-32
ACTUATOR TYPE	Locking Lever
ACTUATOR MATERIAL	-
ACTUATOR LENGTH	26.67mm

Related Tags

Honeywell Sensing and Productivity Solutions 32NT91-7E	32NT91-7E Distributor	32NT91-7E Supplier
32NT91-7E Price	32NT91-7E Pictures	32NT91-7E Image
32NT91-7E PDF Datasheet	32NT91-7E Download Datasheet	32NT91-7E Datasheet
32NT91-7E Stock	Buy 32NT91-7E	Buy Honeywell Sensing and Productivity Solutions 32NT91-7E
Honeywell Sensing and Productivity Solutions 32NT91-7E	Honeywell Sensing and Productivity Solutions Supplier	Honeywell Sensing and Productivity Solutions Distributor
Honeywell Sensing and Productivity Solutions 32NT91-7E	HONEYWELL 32NT91-7E	Honeywell Sensing and Control EMEA 32NT91-7E
Honeywell Sensing and Productivity Solutions T&M 32NT91-7E		

Related Products

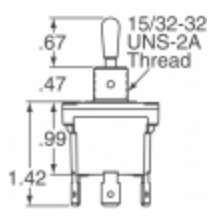

32NT91-227
Manufacturers: Honeywell Sensing and Productivity Solutions
Description: SWITCH TOGGLE DPDT 10A 125V
In stock: 3644 pcs
RFQ

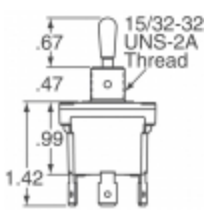

32NT91-4
Manufacturers: Honeywell Sensing and Productivity Solutions
Description: SWITCH TOGGLE DPST-NC 10A 125V
In stock: 4437 pcs
RFQ

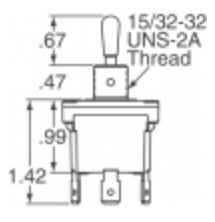

32NT91-31
Manufacturers: Honeywell Sensing and Productivity Solutions
Description: SWITCH TOGGLE DPDT 15A 125V
In stock: 4922 pcs
RFQ

32NT91-70
Manufacturers: Honeywell Sensing and Productivity Solutions
Description: SWITCH TOGGLE DPDT 10A 125V
In stock: 3147 pcs
RFQ

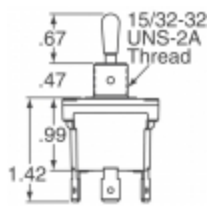

32NT91-5
Manufacturers: Honeywell Sensing and Productivity Solutions
Description: SWITCH TOGGLE DPDT 10A 125V
In stock: 4380 pcs
RFQ

32NT91-61
Manufacturers: Honeywell Sensing and Productivity Solutions
Description: SWITCH TOGGLE DPST-NO 10A 125V
In stock: 4459 pcs
RFQ

32NT91-3
Manufacturers: Honeywell Sensing and Productivity Solutions
Description: SWITCH TOGGLE DPDT 15A 125V
In stock: 4816 pcs
RFQ

32NT91-50
Manufacturers: Honeywell Sensing and Productivity Solutions
Description: SWITCH TOGGLE DPDT 10A 125V
In stock: 3300 pcs
RFQ

Honeywell

32NT94-70L
Manufacturers: Honeywell Sensing and Productivity Solutions
Description: SWITCH TOGGLE DPDT 10A 125V
In stock: 1983 pcs
RFQ

32NT91-6
Manufacturers: Honeywell Sensing and Productivity Solutions
Description: SWITCH TOGGLE DPST-NO 10A 125V
In stock: 3641 pcs
RFQ

32NT91-7
Manufacturers: Honeywell Sensing and Productivity Solutions
Description: SWITCH TOGGLE DPDT 10A 125V
In stock: 3430 pcs
RFQ

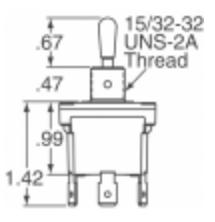

32NT91-8
Manufacturers: Honeywell Sensing and Productivity Solutions
Description: SWITCH TOGGLE DPDT 10A 125V
In stock: 4634 pcs
RFQ

Copyright © 2020 Reliable Distributor of Electronic Components

E-mail: Info@infinity-electronic.com
Address: 17F, Gaylord Commercial Building, 114-118 Lockhart Road, Wan Chai, Hong Kong