Honeywell | Honeywell Sensing and Productivity Solutions

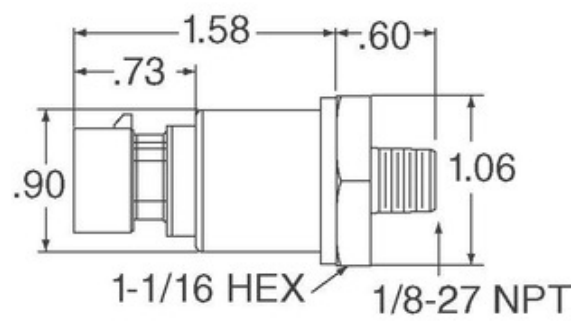

Image may be representation. See specifications for product details.

MLH03KPSB06G

Part Number:	MLH03KPSB06G
Manufacturer/Brand:	Honeywell Sensing and Productivity Solutions
Product description	SENSOR SEALED GAUGE 0-3000 PSI
Datasheets:	1.MLH03KPSB06G.pdf 2.MLH03KPSB06G.pdf
RoHs Status	Lead free / RoHS Compliant
Stock Condition	850 pcs stock
Ship From	Hong Kong
Shipment Way	DHL/Fedex/TNT/UPS/EMS

REQUEST FOR QUOTATION

Specifications of MLH03KPSB06G

PART NUMBER	MLH03KPSB06G
MANUFACTURER	Honeywell Sensing and Productivity Solutions
DESCRIPTION	SENSOR SEALED GAUGE 0-3000 PSI
LEAD FREE STATUS / ROHS STATUS	Lead free / RoHS Compliant
QUANTITY AVAILABLE	850 pcs
DATA SHEET	1.MLH03KPSB06G.pdf 2.MLH03KPSB06G.pdf
VOLTAGE - SUPPLY	8 V ~ 30 V
TERMINATION STYLE	Packard Metripak 150
SUPPLIER DEVICE PACKAGE	-
SERIES	MLH
PRESSURE TYPE	Sealed Gauge
PORT STYLE	Threaded
PORT SIZE	Male - 1/8" (3.18mm) NPT
PACKAGE / CASE	Cylinder, Metal
OUTPUT TYPE	Analog Voltage
OUTPUT	1 V ~ 5 V
OPERATING TEMPERATURE	-40°C ~ 125°C
OPERATING PRESSURE	3000 PSI (20684.27 kPa)
MOISTURE SENSITIVITY LEVEL (MSL)	1 (Unlimited)
MAXIMUM PRESSURE	6000 PSI (41368.54 kPa)
LEAD FREE STATUS / ROHS STATUS	Lead free / RoHS Compliant
FEATURES	Amplified Output, Temperature Compensated
DETAILED DESCRIPTION	Pressure Sensor 3000 PSI (20684.27 kPa) Sealed Gauge Male - 1/8" (3.18mm) NPT 1 V ~ 5 V Cylinder, Metal
ACCURACY	±0.25%

Related Tags

Honeywell Sensing and Productivity Solutions MLH03KPSB06G	MLH03KPSB06G Distributor	MLH03KPSB06G Supplier
MLH03KPSB06G Price	MLH03KPSB06G Pictures	MLH03KPSB06G Image
MLH03KPSB06G PDF Datasheet	MLH03KPSB06G Download Datasheet	MLH03KPSB06G Datasheet
MLH03KPSB06G Stock	Buy MLH03KPSB06G	Buy Honeywell Sensing and Productivity Solutions MLH03KPSB06G
Honeywell Sensing and Productivity Solutions MLH03KPSB06G	Honeywell Sensing and Productivity Solutions Supplier	Honeywell Sensing and Productivity Solutions Distributor
Honeywell Sensing and Productivity Solutions MLH03KPSB06G	HONEYWELL MLH03KPSB06G	Honeywell Sensing and Control EMEA MLH03KPSB06G
Honeywell Sensing and Productivity Solutions T&M MLH03KPSB06G		

Related Products

MLH03KPSB06A
Manufacturers: Honeywell Sensing and Productivity Solutions
Description: SENSOR AMP 3000PSI .5-4.5VDC OUT
In stock: 980 pcs
RFQ

MLH03KPSB10B
Manufacturers: Honeywell Sensing and Productivity Solutions
Description: SENSOR AMP 3000PSI 4-20MA OUT
In stock: 2930 pcs
RFQ

MLH03KPSL01B
Manufacturers: Honeywell Sensing and Productivity Solutions
Description: SENSOR AMP 3000PSI 4-20MA OUT
In stock: 770 pcs
RFQ

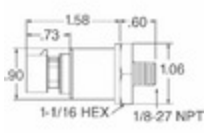

MLH03KPSB10A
Manufacturers: Honeywell Sensing and Productivity Solutions
Description: SENSOR SEALED GAUGE 0-3000 PSI
In stock: 1168 pcs
RFQ

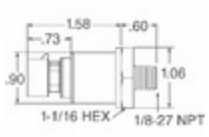

MLH03KPSB17E
Manufacturers: Honeywell Sensing and Productivity Solutions
Description: MLH ALL METAL PRESS SENSE -ATF
In stock: 4674 pcs
RFQ

MLH03KPSB01B
Manufacturers: Honeywell Sensing and Productivity Solutions
Description: SENSOR AMP 3000PSI 4-20MA OUT
In stock: 762 pcs
RFQ

MLH03KPSB01G
Manufacturers: Honeywell Sensing and Productivity Solutions
Description: SENSOR AMP 3000PSI 1-5VDC OUT
In stock: 786 pcs
RFQ

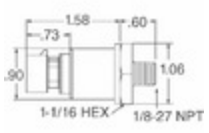

MLH03KPSB01C
Manufacturers: Honeywell Sensing and Productivity Solutions
Description: MLH ALL METAL PRESS SENSE -ATF
In stock: 5884 pcs
RFQ

MLH03KPSB06B
Manufacturers: Honeywell Sensing and Productivity Solutions
Description: SENSOR AMP 3000PSI 4-20MA OUT
In stock: 1193 pcs
RFQ

MLH03KPSB01A
Manufacturers: Honeywell Sensing and Productivity Solutions
Description: SENSOR AMP 3000PSI .5-4.5VDC OUT
In stock: 855 pcs
RFQ

MLH03KPSL01A
Manufacturers: Honeywell Sensing and Productivity Solutions
Description: SENSOR AMP 3000PSI .5-4.5VDC OUT
In stock: 722 pcs
RFQ

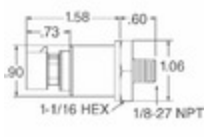

MLH03KPSB12A
Manufacturers: Honeywell Sensing and Productivity Solutions
Description: SENSOR SEALED GAUGE 0-3000 PSI
In stock: 3412 pcs
RFQ

Copyright © 2020 Reliable Distributor of Electronic Components

E-mail: Info@infinity-electronic.com
Address: 17F, Gaylord Commercial Building, 114-118 Lockhart Road, Wan Chai, Hong Kong