Honeywell | Honeywell Sensing and Productivity Solutions

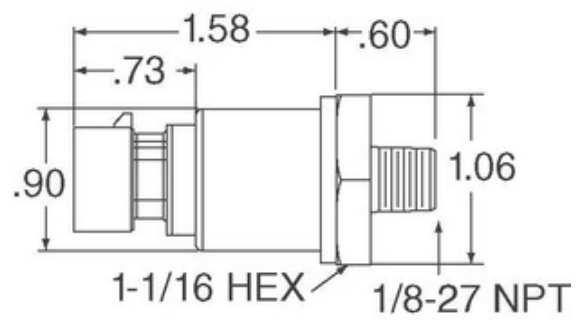

Image may be representation. See specifications for product details.

MLH125PGB01C

Part Number:	MLH125PGB01C
Manufacturer/Brand:	Honeywell Sensing and Productivity Solutions
Product description	MLH ALL METAL PRESS SENSE GAUGE
Datasheets:	1.MLH125PGB01C.pdf 2.MLH125PGB01C.pdf
RoHs Status	Lead free / RoHS Compliant
Stock Condition	6712 pcs stock
Ship From	Hong Kong
Shipment Way	DHL/Fedex/TNT/UPS/EMS

REQUEST FOR QUOTATION

Specifications of MLH125PGB01C

PART NUMBER	MLH125PGB01C
MANUFACTURER	Honeywell Sensing and Productivity Solutions
DESCRIPTION	MLH ALL METAL PRESS SENSE GAUGE
LEAD FREE STATUS / ROHS STATUS	Lead free / RoHS Compliant
QUANTITY AVAILABLE	6712 pcs
DATA SHEET	1.MLH125PGB01C.pdf 2.MLH125PGB01C.pdf
VOLTAGE - SUPPLY	8 V ~ 30 V
SUPPLIER DEVICE PACKAGE	-
SERIES	MLH
PRESSURE TYPE	Vented Gauge
PORT STYLE	Threaded
PORT SIZE	Male - 1/4" (6.35mm) NPT
PACKAGE / CASE	Cylinder, Metal
OUTPUT TYPE	Analog Voltage
OUTPUT	1 V ~ 6 V
OPERATING TEMPERATURE	-40°C ~ 125°C
OPERATING PRESSURE	125 PSI (861.84 kPa)
MOISTURE SENSITIVITY LEVEL (MSL)	1 (Unlimited)
MAXIMUM PRESSURE	-
LEAD FREE STATUS / ROHS STATUS	Lead free / RoHS Compliant
FEATURES	Amplified Output, Temperature Compensated
DETAILED DESCRIPTION	Pressure Sensor 125 PSI (861.84 kPa) Vented Gauge Male - 1/4" (6.35mm) NPT 1 V ~ 6 V Cylinder, Metal
ACCURACY	±0.25%

Related Tags

Honeywell Sensing and Productivity Solutions MLH125PGB01C	MLH125PGB01C Distributor	MLH125PGB01C Supplier
MLH125PGB01C Price	MLH125PGB01C Pictures	MLH125PGB01C Image
MLH125PGB01C PDF Datasheet	MLH125PGB01C Download Datasheet	MLH125PGB01C Datasheet
MLH125PGB01C Stock	Buy MLH125PGB01C	Buy Honeywell Sensing and Productivity Solutions MLH125PGB01C
Honeywell Sensing and Productivity Solutions MLH125PGB01C	Honeywell Sensing and Productivity Solutions Supplier	Honeywell Sensing and Productivity Solutions Distributor
Honeywell Sensing and Productivity Solutions MLH125PGB01C	HONEYWELL MLH125PGB01C	Honeywell Sensing and Control EMEA MLH125PGB01C
Honeywell Sensing and Productivity Solutions T&M MLH125PGB01C		

Related Products

MLH110BST10A
Manufacturers: Honeywell Sensing and Productivity Solutions
Description: SENSOR SEALED GAUGE 0-110 BAR
In stock: 1021 pcs
RFQ

MLH100PSC06A
Manufacturers: Honeywell Sensing and Productivity Solutions
Description: MLH ALL METAL PRESS SENSE -ATF
In stock: 3458 pcs
RFQ

MLH100PSB10A
Manufacturers: Honeywell Sensing and Productivity Solutions
Description: MLH ALL METAL PRESS SENSE -ATF
In stock: 906 pcs
RFQ

MLH125PGL01C
Manufacturers: Honeywell Sensing and Productivity Solutions
Description: MLH ALL METAL PRESS SENSE GAUGE
In stock: 582 pcs
RFQ

MLH125PGB06A
Manufacturers: Honeywell Sensing and Productivity Solutions
Description: MLH ALL METAL PRESS SENSE -ATF
In stock: 5552 pcs
RFQ

MLH100PST06A
Manufacturers: Honeywell Sensing and Productivity Solutions
Description: SENSOR SEALED GAUGE 0-100 PSI
In stock: 923 pcs
RFQ

MLH125PGB06C
Manufacturers: Honeywell Sensing and Productivity Solutions
Description: MLH ALL METAL PRESS SENSE GAUGE
In stock: 5809 pcs
RFQ

MLH100PSG06B
Manufacturers: Honeywell Sensing and Productivity Solutions
Description: SENSOR SEALED GAUGE 0-100 PSI
In stock: 4125 pcs
RFQ

MLH150BSH08A
Manufacturers: Honeywell Sensing and Productivity Solutions
Description: MLH ALL METAL PRESS SENSE -ATF
In stock: 6755 pcs
RFQ

MLH125PGB06B
Manufacturers: Honeywell Sensing and Productivity Solutions
Description: MLH ALL METAL PRESS SENSE -ATF
In stock: 5617 pcs
RFQ

MLH150BSL03B
Manufacturers: Honeywell Sensing and Productivity Solutions
Description: SENSOR SEALED GAUGE 0-150 PSI
In stock: 868 pcs
RFQ

MLH100PSCDJ1230
Manufacturers: Honeywell Sensing and Productivity Solutions
Description: MLH ALL METAL PRESS SENSE -ATF
In stock: 6635 pcs
RFQ

Copyright © 2020 Reliable Distributor of Electronic Components

E-mail: Info@infinity-electronic.com
Address: 17F, Gaylord Commercial Building, 114-118 Lockhart Road, Wan Chai, Hong Kong