Honeywell | Honeywell Sensing and Productivity Solutions

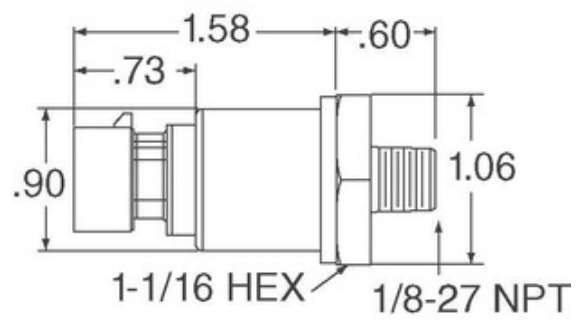


Image may be representation. See specifications for product details.

# MLH040BSG01B

| | |
|---|---|
| Part Number: | MLH040BSG01B |
| Manufacturer/Brand: | Honeywell Sensing and Productivity Solutions |
| Product description | SENSOR SEALED GAUGE 0-40 BAR |
| Datasheets: | 1.MLH040BSG01B.pdf<br>2.MLH040BSG01B.pdf |
| RoHs Status | Lead free / RoHS Compliant |
| Stock Condition | 6971 pcs stock |
| Ship From | Hong Kong |
| Shipment Way | DHL/Fedex/TNT/UPS/EMS |

**REQUEST FOR QUOTATION**

## Specifications of MLH040BSG01B

| | |
|---|---|
| PART NUMBER | MLH040BSG01B |
| MANUFACTURER | Honeywell Sensing and Productivity Solutions |
| DESCRIPTION | SENSOR SEALED GAUGE 0-40 BAR |
| LEAD FREE STATUS / ROHS STATUS | Lead free / RoHS Compliant |
| QUANTITY AVAILABLE | 6971 pcs |
| DATA SHEET | 1.MLH040BSG01B.pdf<br>2.MLH040BSG01B.pdf |
| VOLTAGE - SUPPLY | 9.5 V ~ 30 V |
| TERMINATION STYLE | DIN |
| SUPPLIER DEVICE PACKAGE | - |
| SERIES | MLH |
| PRESSURE TYPE | Sealed Gauge |
| PORT STYLE | Threaded |
| PORT SIZE | Male - 1/4" (6.35mm) NPT |
| PACKAGE / CASE | Cylinder, Metal |
| OUTPUT TYPE | Analog Current |
| OUTPUT | 4 mA ~ 20 mA |
| OPERATING TEMPERATURE | -40°C ~ 125°C |
| OPERATING PRESSURE | 580.15 PSI (4000 kPa) |
| MOISTURE SENSITIVITY LEVEL (MSL) | 1 (Unlimited) |
| MAXIMUM PRESSURE | 1160.3 PSI (8000 kPa) |
| LEAD FREE STATUS / ROHS STATUS | Lead free / RoHS Compliant |
| FEATURES | Amplified Output, Temperature Compensated |
| DETAILED DESCRIPTION | Pressure Sensor 580.15 PSI (4000 kPa) Sealed Gauge Male - 1/4" (6.35mm) NPT 4 mA ~ 20 mA Cylinder, Metal |
| ACCURACY | ±0.25% |

## Related Tags

| | | |
|---|---|---|
| Honeywell Sensing and Productivity Solutions MLH040BSG01B | MLH040BSG01B Distributor | MLH040BSG01B Supplier |
| MLH040BSG01B Price | MLH040BSG01B Pictures | MLH040BSG01B Image |
| MLH040BSG01B PDF Datasheet | MLH040BSG01B Download Datasheet | MLH040BSG01B Datasheet |
| MLH040BSG01B Stock | Buy MLH040BSG01B | Buy Honeywell Sensing and Productivity Solutions MLH040BSG01B |
| Honeywell Sensing and Productivity Solutions MLH040BSG01B | Honeywell Sensing and Productivity Solutions Supplier | Honeywell Sensing and Productivity Solutions Distributor |
| Honeywell Sensing and Productivity Solutions MLH040BSG01B | HONEYWELL MLH040BSG01B | Honeywell Sensing and Control EMEA MLH040BSG01B |
| Honeywell Sensing and Productivity Solutions T&M MLH040BSG01B | | |

## Related Products

**MLH040BSD14B**
Manufacturers: Honeywell Sensing and Productivity Solutions
Description: SENSOR SEALED GAUGE 0-40 BAR
In stock: 3522 pcs
RFQ

**MLH040BSD14A**
Manufacturers: Honeywell Sensing and Productivity Solutions
Description: SENSOR SEALED GAUGE 0-40 BAR
In stock: 1077 pcs
RFQ

**MLH040BSG13E**
Manufacturers: Honeywell Sensing and Productivity Solutions
Description: MLH ALL METAL PRESS SENSE -ATF
In stock: 6668 pcs
RFQ

**MLH040BSB01B**
Manufacturers: Honeywell Sensing and Productivity Solutions
Description: SENSOR SEALED GAUGE 0-40 BAR
In stock: 938 pcs
RFQ

**MLH040BSD14E**
Manufacturers: Honeywell Sensing and Productivity Solutions
Description: SENSOR SEALED GAUGE 0-40 BAR
In stock: 3224 pcs
RFQ

**MLH040BGH01A**
Manufacturers: Honeywell Sensing and Productivity Solutions
Description: SENSOR GAUGE 0-40 BAR
In stock: 1024 pcs
RFQ

**MLH040BSG13B**
Manufacturers: Honeywell Sensing and Productivity Solutions
Description: MLH ALL METAL PRESS SENSE -ATF
In stock: 3899 pcs
RFQ

**MLH040BSG17B**
Manufacturers: Honeywell Sensing and Productivity Solutions
Description: MLH ALL METAL PRESS SENSE -ATF
In stock: 862 pcs
RFQ

**MLH040BSL14A**
Manufacturers: Honeywell Sensing and Productivity Solutions
Description: MLH ALL METAL PRESS SENSE -ATF
In stock: 936 pcs
RFQ

**MLH040BSL04B**
Manufacturers: Honeywell Sensing and Productivity Solutions
Description: SENSOR SEALED GAUGE 0-40 BAR
In stock: 867 pcs
RFQ

**MLH040BSB09A**
Manufacturers: Honeywell Sensing and Productivity Solutions
Description: SENSOR SEALED GAUGE 0-40 BAR
In stock: 3057 pcs
RFQ

**MLH040BSG02B**
Manufacturers: Honeywell Sensing and Productivity Solutions
Description: MLH ALL METAL PRESS SENSE -ATF
In stock: 4624 pcs
RFQ

**Copyright © 2020 Reliable Distributor of Electronic Components**
E-mail: Info@infinity-electronic.com
Address: 17F, Gaylord Commercial Building, 114-118 Lockhart Road, Wan Chai, Hong Kong