Honeywell | Honeywell Sensing and Productivity Solutions

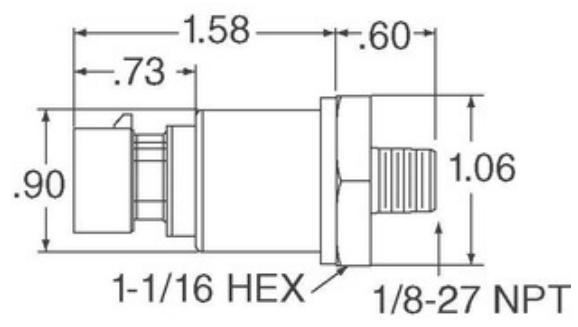


Image may be representation. See specifications for product details.

# MLH250BSD14E

| | |
|---|---|
| Part Number: | MLH250BSD14E |
| Manufacturer/Brand: | Honeywell Sensing and Productivity Solutions |
| Product description | SENSOR SEALED GAUGE 0-250 BAR |
| Datasheets: | 1.MLH250BSD14E.pdf<br>2.MLH250BSD14E.pdf |
| RoHs Status | Lead free / RoHS Compliant |
| Stock Condition | 923 pcs stock |
| Ship From | Hong Kong |
| Shipment Way | DHL/Fedex/TNT/UPS/EMS |

**REQUEST FOR QUOTATION**

## Specifications of MLH250BSD14E

| | |
|---|---|
| PART NUMBER | MLH250BSD14E |
| MANUFACTURER | Honeywell Sensing and Productivity Solutions |
| DESCRIPTION | SENSOR SEALED GAUGE 0-250 BAR |
| LEAD FREE STATUS / ROHS STATUS | Lead free / RoHS Compliant |
| QUANTITY AVAILABLE | 923 pcs |
| DATA SHEET | 1.MLH250BSD14E.pdf<br>2.MLH250BSD14E.pdf |
| VOLTAGE - SUPPLY | 7 V ~ 30 V |
| TERMINATION STYLE | M12 |
| SUPPLIER DEVICE PACKAGE | - |
| SERIES | MLH |
| PRESSURE TYPE | Sealed Gauge |
| PORT STYLE | Threaded |
| PORT SIZE | Male - 1/4" (6.35mm) BSP |
| PACKAGE / CASE | Cylinder, Metal |
| OUTPUT TYPE | Analog Voltage |
| OUTPUT | 0.5 V ~ 4.5 V |
| OPERATING TEMPERATURE | -40°C ~ 125°C |
| OPERATING PRESSURE | 3625.94 PSI (25000 kPa) |
| MOISTURE SENSITIVITY LEVEL (MSL) | 1 (Unlimited) |
| MAXIMUM PRESSURE | 7251.89 PSI (50000 kPa) |
| LEAD FREE STATUS / ROHS STATUS | Lead free / RoHS Compliant |
| FEATURES | Amplified Output, Temperature Compensated |
| DETAILED DESCRIPTION | Pressure Sensor 3625.94 PSI (25000 kPa) Sealed Gauge Male - 1/4" (6.35mm) BSP 0.5 V ~ 4.5 V Cylinder, Metal |
| ACCURACY | ±0.25% |

## Related Tags

- Honeywell Sensing and Productivity Solutions MLH250BSD14E
- MLH250BSD14E Distributor
- MLH250BSD14E Supplier
- MLH250BSD14E Price
- MLH250BSD14E Pictures
- MLH250BSD14E Image
- MLH250BSD14E PDF Datasheet
- MLH250BSD14E Download Datasheet
- MLH250BSD14E Datasheet
- MLH250BSD14E Stock
- Buy MLH250BSD14E
- Buy Honeywell Sensing and Productivity Solutions MLH250BSD14E
- Honeywell Sensing and Productivity Solutions MLH250BSD14E
- Honeywell Sensing and Productivity Solutions Supplier
- Honeywell Sensing and Productivity Solutions Distributor
- Honeywell Sensing and Productivity Solutions MLH250BSD14E
- HONEYWELL MLH250BSD14E
- Honeywell Sensing and Control EMEA MLH250BSD14E
- Honeywell Sensing and Productivity Solutions T&M MLH250BSD14E

## Related Products

### MLH250BSD13D
Manufacturers: Honeywell Sensing and Productivity Solutions
Description: MLH ALL METAL PRESS SENSE -ATF
In stock: 5594 pcs
RFQ

### MLH250BSC17D
Manufacturers: Honeywell Sensing and Productivity Solutions
Description: MLH ALL METAL PRESS SENSE -ATF
In stock: 3478 pcs
RFQ

### MLH250BSD14B
Manufacturers: Honeywell Sensing and Productivity Solutions
Description: SENSOR SEALED GAUGE 0-250 BAR
In stock: 985 pcs
RFQ

### MLH250BSD14A
Manufacturers: Honeywell Sensing and Productivity Solutions
Description: SENSOR SEALED GAUGE 0-250 BAR
In stock: 4275 pcs
RFQ

### MLH250BSG13C
Manufacturers: Honeywell Sensing and Productivity Solutions
Description: SENSOR SEALED GAUGE 0-250 BAR
In stock: 6158 pcs
RFQ

### MLH250BSD17D
Manufacturers: Honeywell Sensing and Productivity Solutions
Description: MLH ALL METAL PRESS SENSE -ATF
In stock: 5741 pcs
RFQ

### MLH250BSD01B
Manufacturers: Honeywell Sensing and Productivity Solutions
Description: SENSOR AMP 250BAR 4-20MA OUT
In stock: 811 pcs
RFQ

### MLH250BSB14D
Manufacturers: Honeywell Sensing and Productivity Solutions
Description: MLH ALL METAL PRESS SENSE -ATF
In stock: 1049 pcs
RFQ

### MLH250BSG02B
Manufacturers: Honeywell Sensing and Productivity Solutions
Description: MLH ALL METAL PRESS SENSE -ATF
In stock: 899 pcs
RFQ

### MLH250BSG13D
Manufacturers: Honeywell Sensing and Productivity Solutions
Description: SENSOR SEALED GAUGE 0-250 BAR
In stock: 6294 pcs
RFQ

### MLH250BSG14D
Manufacturers: Honeywell Sensing and Productivity Solutions
Description: SENSOR SEALED GAUGE 0-250 BAR
In stock: 5355 pcs
RFQ

### MLH250BSG13B
Manufacturers: Honeywell Sensing and Productivity Solutions
Description: MLH ALL METAL PRESS SENSE -ATF
In stock: 6512 pcs
RFQ

**Copyright © 2020 Reliable Distributor of Electronic Components**

E-mail: Info@infinity-electronic.com
Address: 17F, Gaylord Commercial Building, 114-118 Lockhart Road, Wan Chai, Hong Kong