Honeywell | Honeywell Sensing and Productivity Solutions

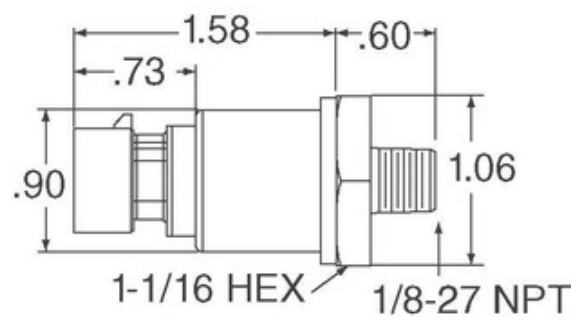

Image may be representation. See specifications for product details.

MLH010BGD15A

Part Number:	MLH010BGD15A
Manufacturer/Brand:	Honeywell Sensing and Productivity Solutions
Product description	SENSOR GAUGE 0-10 BAR
Datasheets:	1.MLH010BGD15A.pdf 2.MLH010BGD15A.pdf
RoHs Status	Lead free / RoHS Compliant
Stock Condition	1082 pcs stock
Ship From	Hong Kong
Shipment Way	DHL/Fedex/TNT/UPS/EMS

REQUEST FOR QUOTATION

Specifications of MLH010BGD15A

PART NUMBER	MLH010BGD15A
MANUFACTURER	Honeywell Sensing and Productivity Solutions
DESCRIPTION	SENSOR GAUGE 0-10 BAR
LEAD FREE STATUS / ROHS STATUS	Lead free / RoHS Compliant
QUANTITY AVAILABLE	1082 pcs
DATA SHEET	1.MLH010BGD15A.pdf 2.MLH010BGD15A.pdf
VOLTAGE - SUPPLY	5 V ~ 6 V
TERMINATION STYLE	M12
SUPPLIER DEVICE PACKAGE	-
SERIES	MLH
PRESSURE TYPE	Vented Gauge
PORT STYLE	Threaded
PORT SIZE	Male - 1/8" (3.18mm) BSP
PACKAGE / CASE	Cylinder, Metal
OUTPUT TYPE	Analog Voltage
OUTPUT	0.5 V ~ 4.5 V
OPERATING TEMPERATURE	-40°C ~ 125°C
OPERATING PRESSURE	145.04 PSI (1000 kPa)
MOISTURE SENSITIVITY LEVEL (MSL)	1 (Unlimited)
MAXIMUM PRESSURE	435.11 PSI (3000 kPa)
LEAD FREE STATUS / ROHS STATUS	Lead free / RoHS Compliant
FEATURES	Amplified Output, Temperature Compensated
DETAILED DESCRIPTION	Pressure Sensor 145.04 PSI (1000 kPa) Vented Gauge Male - 1/8" (3.18mm) BSP 0.5 V ~ 4.5 V Cylinder, Metal
ACCURACY	±0.25%

Related Tags

Honeywell Sensing and Productivity Solutions MLH010BGD15A	MLH010BGD15A Distributor	MLH010BGD15A Supplier
MLH010BGD15A Price	MLH010BGD15A Pictures	MLH010BGD15A Image
MLH010BGD15A PDF Datasheet	MLH010BGD15A Download Datasheet	MLH010BGD15A Datasheet
MLH010BGD15A Stock	Buy MLH010BGD15A	Buy Honeywell Sensing and Productivity Solutions MLH010BGD15A
Honeywell Sensing and Productivity Solutions MLH010BGD15A	Honeywell Sensing and Productivity Solutions Supplier	Honeywell Sensing and Productivity Solutions Distributor
Honeywell Sensing and Productivity Solutions MLH010BGD15A	HONEYWELL MLH010BGD15A	Honeywell Sensing and Control EMEA MLH010BGD15A
Honeywell Sensing and Productivity Solutions T&M MLH010BGD15A		

Related Products

MLH010BGD14E
Manufacturers: Honeywell Sensing and Productivity Solutions
Description: SENSOR GAUGE 0-10 BAR
In stock: 823 pcs
RFQ

MLH010BGD18B
Manufacturers: Honeywell Sensing and Productivity Solutions
Description: SENSOR GAUGE 0-10 BAR
In stock: 1007 pcs
RFQ

MLH010BGC14B
Manufacturers: Honeywell Sensing and Productivity Solutions
Description: SENSOR GAUGE 0-10 BAR
In stock: 1117 pcs
RFQ

MLH010BGC17G
Manufacturers: Honeywell Sensing and Productivity Solutions
Description: MLH ALL METAL PRESS SENSE -ATF
In stock: 3935 pcs
RFQ

MLH010BGD14B
Manufacturers: Honeywell Sensing and Productivity Solutions
Description: SENSOR GAUGE 0-10 BAR
In stock: 854 pcs
RFQ

MLH010BGD14A
Manufacturers: Honeywell Sensing and Productivity Solutions
Description: SENSOR GAUGE 0-10 BAR
In stock: 1179 pcs
RFQ

MLH010BGD15B
Manufacturers: Honeywell Sensing and Productivity Solutions
Description: SENSOR GAUGE 0-10 BAR
In stock: 1110 pcs
RFQ

MLH010BGD15E
Manufacturers: Honeywell Sensing and Productivity Solutions
Description: SENSOR GAUGE 0-10 BAR
In stock: 837 pcs
RFQ

MLH010BGD18E
Manufacturers: Honeywell Sensing and Productivity Solutions
Description: SENSOR GAUGE 0-10 BAR
In stock: 961 pcs
RFQ

MLH010BGD18A
Manufacturers: Honeywell Sensing and Productivity Solutions
Description: SENSOR GAUGE 0-10 BAR
In stock: 3381 pcs
RFQ

MLH010BGD01C
Manufacturers: Honeywell Sensing and Productivity Solutions
Description: MLH ALL METAL PRESS SENSE -ATF
In stock: 5760 pcs
RFQ

MLH010BGG01B
Manufacturers: Honeywell Sensing and Productivity Solutions
Description: MLH ALL METAL PRESS SENSE -ATF
In stock: 949 pcs
RFQ

Copyright © 2020 Reliable Distributor of Electronic Components
E-mail: Info@infinity-electronic.com
Address: 17F, Gaylord Commercial Building, 114-118 Lockhart Road, Wan Chai, Hong Kong