Honeywell | Honeywell Sensing and Productivity Solutions

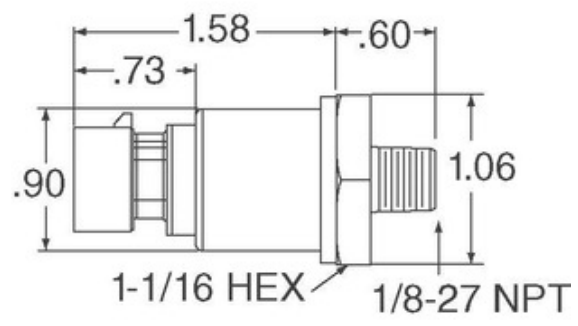

Image may be representation. See specifications for product details.

MLH010BSL01A

Part Number:	MLH010BSL01A
Manufacturer/Brand:	Honeywell Sensing and Productivity Solutions
Product description	MLH ALL METAL PRESS SENSE -ATF
Datasheets:	1.MLH010BSL01A.pdf 2.MLH010BSL01A.pdf
RoHs Status	Lead free / RoHS Compliant
Stock Condition	6915 pcs stock
Ship From	Hong Kong
Shipment Way	DHL/Fedex/TNT/UPS/EMS

REQUEST FOR QUOTATION

Specifications of MLH010BSL01A

PART NUMBER	MLH010BSL01A
MANUFACTURER	Honeywell Sensing and Productivity Solutions
DESCRIPTION	MLH ALL METAL PRESS SENSE -ATF
LEAD FREE STATUS / ROHS STATUS	Lead free / RoHS Compliant
QUANTITY AVAILABLE	6915 pcs
DATA SHEET	1.MLH010BSL01A.pdf 2.MLH010BSL01A.pdf
VOLTAGE - SUPPLY	5 V ~ 6 V
SUPPLIER DEVICE PACKAGE	-
SERIES	MLH
PRESSURE TYPE	Sealed Gauge
PORT STYLE	Threaded
PORT SIZE	Male - 1/4" (6.35mm) NPT
PACKAGE / CASE	Cylinder, Metal
OUTPUT TYPE	Analog Voltage
OUTPUT	0.5 V ~ 4.5 V
OPERATING TEMPERATURE	-40°C ~ 125°C
OPERATING PRESSURE	145.04 PSI (1000 kPa)
MOISTURE SENSITIVITY LEVEL (MSL)	1 (Unlimited)
MAXIMUM PRESSURE	435.11 PSI (3000 kPa)
LEAD FREE STATUS / ROHS STATUS	Lead free / RoHS Compliant
FEATURES	Amplified Output, Temperature Compensated
DETAILED DESCRIPTION	Pressure Sensor 145.04 PSI (1000 kPa) Sealed Gauge Male - 1/4" (6.35mm) NPT 0.5 V ~ 4.5 V Cylinder, Metal
ACCURACY	±0.25%

Related Tags

- Honeywell Sensing and Productivity Solutions MLH010BSL01A
- MLH010BSL01A Distributor
- MLH010BSL01A Supplier
- MLH010BSL01A Price
- MLH010BSL01A Pictures
- MLH010BSL01A Image
- MLH010BSL01A PDF Datasheet
- MLH010BSL01A Download Datasheet
- MLH010BSL01A Datasheet
- MLH010BSL01A Stock
- Buy MLH010BSL01A
- Buy Honeywell Sensing and Productivity Solutions MLH010BSL01A
- Honeywell Sensing and Productivity Solutions MLH010BSL01A
- Honeywell Sensing and Productivity Solutions Supplier
- Honeywell Sensing and Productivity Solutions Distributor
- Honeywell Sensing and Productivity Solutions MLH010BSL01A
- HONEYWELL MLH010BSL01A
- Honeywell Sensing and Control EMEA MLH010BSL01A
- Honeywell Sensing and Productivity Solutions T&M MLH010BSL01A

Related Products

MLH010KSC14G
Manufacturers: Honeywell Sensing and Productivity Solutions
Description: MLH ALL METAL PRESS SENSE
In stock: 722 pcs
RFQ

MLH016BGB06B
Manufacturers: Honeywell Sensing and Productivity Solutions
Description: MLH ALL METAL PRESS SENSE -ATF
In stock: 3802 pcs
RFQ

MLH016BGB20B
Manufacturers: Honeywell Sensing and Productivity Solutions
Description: MLH ALL METAL PRESS SENSE -ATF
In stock: 1067 pcs
RFQ

MLH010BSG17B
Manufacturers: Honeywell Sensing and Productivity Solutions
Description: TRANS MLH010 BAR S 43650-C G1
In stock: 850 pcs
RFQ

MLH010BSG19B
Manufacturers: Honeywell Sensing and Productivity Solutions
Description: TRANS MLH010 BAR S 43650-C PT1
In stock: 4757 pcs
RFQ

MLH010BSH08A
Manufacturers: Honeywell Sensing and Productivity Solutions
Description: SENSOR SEALED GAUGE 0-10 BAR
In stock: 4593 pcs
RFQ

MLH010BSL06B
Manufacturers: Honeywell Sensing and Productivity Solutions
Description: SENSOR SEALED GAUGE 0-10 BAR
In stock: 6324 pcs
RFQ

MLH010BSB06E
Manufacturers: Honeywell Sensing and Productivity Solutions
Description: SENSOR GAUGE 0-10 BAR
In stock: 799 pcs
RFQ

MLH010BSG01B
Manufacturers: Honeywell Sensing and Productivity Solutions
Description: SENSOR GAUGE 0-10 BAR
In stock: 3678 pcs
RFQ

MLH010BSC17G
Manufacturers: Honeywell Sensing and Productivity Solutions
Description: MLH ALL METAL PRESS SENSE -ATF
In stock: 764 pcs
RFQ

MLH010BST14A
Manufacturers: Honeywell Sensing and Productivity Solutions
Description: MLH ALL METAL PRESS SENSE -ATF
In stock: 4204 pcs
RFQ

MLH016BGB01B
Manufacturers: Honeywell Sensing and Productivity Solutions
Description: SENSOR GAUGE 0-16 BAR
In stock: 1033 pcs
RFQ

Copyright © 2020 Reliable Distributor of Electronic Components

E-mail: Info@infinity-electronic.com
Address: 17F, Gaylord Commercial Building, 114-118 Lockhart Road, Wan Chai, Hong Kong