Honeywell | Honeywell Sensing and Productivity Solutions

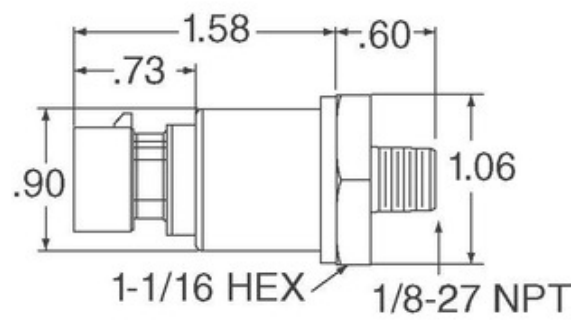

Image may be representation. See specifications for product details.

MLH500BST14A

Part Number:	MLH500BST14A
Manufacturer/Brand:	Honeywell Sensing and Productivity Solutions
Product description	SENSOR SEALED GAUGE 0-500 BAR
Datasheets:	1.MLH500BST14A.pdf 2.MLH500BST14A.pdf
RoHs Status	Lead free / RoHS Compliant
Stock Condition	965 pcs stock
Ship From	Hong Kong
Shipment Way	DHL/Fedex/TNT/UPS/EMS

REQUEST FOR QUOTATION

Specifications of MLH500BST14A

PART NUMBER	MLH500BST14A
MANUFACTURER	Honeywell Sensing and Productivity Solutions
DESCRIPTION	SENSOR SEALED GAUGE 0-500 BAR
LEAD FREE STATUS / ROHS STATUS	Lead free / RoHS Compliant
QUANTITY AVAILABLE	965 pcs
DATA SHEET	1.MLH500BST14A.pdf 2.MLH500BST14A.pdf
VOLTAGE - SUPPLY	5 V ~ 6 V
TERMINATION STYLE	Deutsch, 3 Pin
SUPPLIER DEVICE PACKAGE	-
SERIES	MLH
PRESSURE TYPE	Sealed Gauge
PORT STYLE	Threaded
PORT SIZE	Male - 1/4" (6.35mm) BSP
PACKAGE / CASE	Cylinder, Metal
OUTPUT TYPE	Analog Voltage
OUTPUT	0.5 V ~ 4.5 V
OPERATING TEMPERATURE	-40°C ~ 125°C
OPERATING PRESSURE	7251.89 PSI (50000 kPa)
MOISTURE SENSITIVITY LEVEL (MSL)	1 (Unlimited)
MAXIMUM PRESSURE	10877.83 PSI (75000 kPa)
LEAD FREE STATUS / ROHS STATUS	Lead free / RoHS Compliant
FEATURES	Amplified Output, Temperature Compensated
DETAILED DESCRIPTION	Pressure Sensor 7251.89 PSI (50000 kPa) Sealed Gauge Male - 1/4" (6.35mm) BSP 0.5 V ~ 4.5 V Cylinder, Metal
ACCURACY	±0.25%

Related Tags

Honeywell Sensing and Productivity Solutions MLH500BST14A	MLH500BST14A Distributor	MLH500BST14A Supplier
MLH500BST14A Price	MLH500BST14A Pictures	MLH500BST14A Image
MLH500BST14A PDF Datasheet	MLH500BST14A Download Datasheet	MLH500BST14A Datasheet
MLH500BST14A Stock	Buy MLH500BST14A	Buy Honeywell Sensing and Productivity Solutions MLH500BST14A
Honeywell Sensing and Productivity Solutions MLH500BST14A	Honeywell Sensing and Productivity Solutions Supplier	Honeywell Sensing and Productivity Solutions Distributor
Honeywell Sensing and Productivity Solutions MLH500BST14A	HONEYWELL MLH500BST14A	Honeywell Sensing and Control EMEA MLH500BST14A
Honeywell Sensing and Productivity Solutions T&M MLH500BST14A		

Related Products

MLH500PGL01G
Manufacturers: Honeywell Sensing and Productivity Solutions
Description: SENSOR AMP 500PSI 1-5VDC OUT
In stock: 752 pcs
RFQ

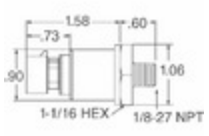

MLH500BSD14B
Manufacturers: Honeywell Sensing and Productivity Solutions
Description: SENSOR SEALED GAUGE 0-500 BAR
In stock: 1050 pcs
RFQ

MLH500PSB01A
Manufacturers: Honeywell Sensing and Productivity Solutions
Description: SENSOR AMP 500PSI .5-4.5VDC OUT
In stock: 758 pcs
RFQ

MLH500PSB01B
Manufacturers: Honeywell Sensing and Productivity Solutions
Description: SENSOR AMP 500PSI 4-20MA OUT
In stock: 866 pcs
RFQ

MLH500PAB01A
Manufacturers: Honeywell Sensing and Productivity Solutions
Description: SENSOR AMP 500PSI .5-4.5VDC OUT
In stock: 5733 pcs
RFQ

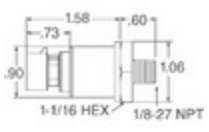

MLH500BSH08A
Manufacturers: Honeywell Sensing and Productivity Solutions
Description: MLH ALL METAL PRESS SENSE -ATF
In stock: 1118 pcs
RFQ

MLH500PGL06A
Manufacturers: Honeywell Sensing and Productivity Solutions
Description: MLH ALL METAL PRESS SENSE -ATF
In stock: 1016 pcs
RFQ

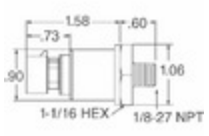

MLH500BSB14B
Manufacturers: Honeywell Sensing and Productivity Solutions
Description: SENSOR SEALED GAUGE 0-500 BAR
In stock: 897 pcs
RFQ

MLH500BSB14A
Manufacturers: Honeywell Sensing and Productivity Solutions
Description: SENSOR SEALED GAUGE 0-500 BAR
In stock: 6569 pcs
RFQ

MLH500PSB06A
Manufacturers: Honeywell Sensing and Productivity Solutions
Description: SENSOR AMP 500PSI .5-4.5VDC OUT
In stock: 906 pcs
RFQ

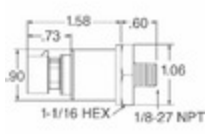

MLH500BSD08E
Manufacturers: Honeywell Sensing and Productivity Solutions
Description: SENSOR SEALED GAUGE 0-500 BAR
In stock: 5088 pcs
RFQ

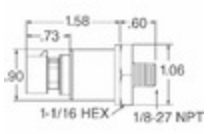

MLH500BSG14D
Manufacturers: Honeywell Sensing and Productivity Solutions
Description: MLH ALL METAL PRESS SENSE -ATF
In stock: 853 pcs
RFQ

Copyright © 2020 Reliable Distributor of Electronic Components

E-mail: Info@infinity-electronic.com
Address: 17F, Gaylord Commercial Building, 114-118 Lockhart Road, Wan Chai, Hong Kong