Honeywell | Honeywell Sensing and Productivity Solutions

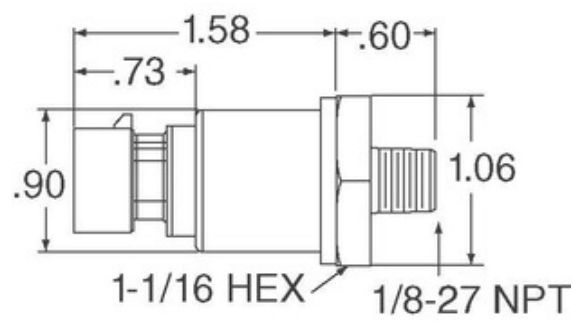


Image may be representation. See specifications for product details.

# MLH010BGB09A

| | |
|---|---|
| Part Number: | MLH010BGB09A |
| Manufacturer/Brand: | Honeywell Sensing and Productivity Solutions |
| Product description | SENSOR GAUGE 0-10 BAR |
| Datasheets: | 1.MLH010BGB09A.pdf<br>2.MLH010BGB09A.pdf |
| RoHs Status | Lead free / RoHS Compliant |
| Stock Condition | 898 pcs stock |
| Ship From | Hong Kong |
| Shipment Way | DHL/Fedex/TNT/UPS/EMS |

**REQUEST FOR QUOTATION**

## Specifications of MLH010BGB09A

| | |
|---|---|
| PART NUMBER | MLH010BGB09A |
| MANUFACTURER | Honeywell Sensing and Productivity Solutions |
| DESCRIPTION | SENSOR GAUGE 0-10 BAR |
| LEAD FREE STATUS / ROHS STATUS | Lead free / RoHS Compliant |
| QUANTITY AVAILABLE | 898 pcs |
| DATA SHEET | 1.MLH010BGB09A.pdf<br>2.MLH010BGB09A.pdf |
| VOLTAGE - SUPPLY | 5 V ~ 6 V |
| TERMINATION STYLE | Packard Metripak 150 |
| SUPPLIER DEVICE PACKAGE | - |
| SERIES | MLH |
| PRESSURE TYPE | Vented Gauge |
| PORT STYLE | Threaded |
| PORT SIZE | Female - 7/16" (11.11mm) UNF Schrader |
| PACKAGE / CASE | Cylinder, Metal |
| OUTPUT TYPE | Analog Voltage |
| OUTPUT | 0.5 V ~ 4.5 V |
| OPERATING TEMPERATURE | -40°C ~ 125°C |
| OPERATING PRESSURE | 145.04 PSI (1000 kPa) |
| MOISTURE SENSITIVITY LEVEL (MSL) | 1 (Unlimited) |
| MAXIMUM PRESSURE | 435.11 PSI (3000 kPa) |
| LEAD FREE STATUS / ROHS STATUS | Lead free / RoHS Compliant |
| FEATURES | Amplified Output, Temperature Compensated |
| DETAILED DESCRIPTION | Pressure Sensor 145.04 PSI (1000 kPa) Vented Gauge Female - 7/16" (11.11mm) UNF Schrader 0.5 V ~ 4.5 V Cylinder, Metal |
| ACCURACY | ±0.25% |

## Related Tags

| | | |
|---|---|---|
| Honeywell Sensing and Productivity Solutions MLH010BGB09A | MLH010BGB09A Distributor | MLH010BGB09A Supplier |
| MLH010BGB09A Price | MLH010BGB09A Pictures | MLH010BGB09A Image |
| MLH010BGB09A PDF Datasheet | MLH010BGB09A Download Datasheet | MLH010BGB09A Datasheet |
| MLH010BGB09A Stock | Buy MLH010BGB09A | Buy Honeywell Sensing and Productivity Solutions MLH010BGB09A |
| Honeywell Sensing and Productivity Solutions MLH010BGB09A | Honeywell Sensing and Productivity Solutions Supplier | Honeywell Sensing and Productivity Solutions Distributor |
| Honeywell Sensing and Productivity Solutions MLH010BGB09A | HONEYWELL MLH010BGB09A | Honeywell Sensing and Control EMEA MLH010BGB09A |
| Honeywell Sensing and Productivity Solutions T&M MLH010BGB09A | | |

## Related Products

**MLH010BGC17G**
Manufacturers: Honeywell Sensing and Productivity Solutions
Description: MLH ALL METAL PRESS SENSE -ATF
In stock: 3935 pcs
RFQ

**MLH010BGD14A**
Manufacturers: Honeywell Sensing and Productivity Solutions
Description: SENSOR GAUGE 0-10 BAR
In stock: 1179 pcs
RFQ

**MLH006BSG01B**
Manufacturers: Honeywell Sensing and Productivity Solutions
Description: MLH ALL METAL PRESS SENSE
In stock: 6985 pcs
RFQ

**MLH010BGC14B**
Manufacturers: Honeywell Sensing and Productivity Solutions
Description: SENSOR GAUGE 0-10 BAR
In stock: 1117 pcs
RFQ

**MLH010BGB06A**
Manufacturers: Honeywell Sensing and Productivity Solutions
Description: SENSOR GAUGE 0-10 BAR
In stock: 949 pcs
RFQ

**MLH006BSG17B**
Manufacturers: Honeywell Sensing and Productivity Solutions
Description: MLH ALL METAL PRESS SENSE -ATF
In stock: 5221 pcs
RFQ

**MLH010BGB14E**
Manufacturers: Honeywell Sensing and Productivity Solutions
Description: SENSOR GAUGE 0-10 BAR
In stock: 785 pcs
RFQ

**MLH010BGD01C**
Manufacturers: Honeywell Sensing and Productivity Solutions
Description: MLH ALL METAL PRESS SENSE -ATF
In stock: 5760 pcs
RFQ

**MLH010BGB20B**
Manufacturers: Honeywell Sensing and Productivity Solutions
Description: MLH ALL METAL PRESS SENSE -ATF
In stock: 1082 pcs
RFQ

**MLH010BGB01B**
Manufacturers: Honeywell Sensing and Productivity Solutions
Description: SENSOR GAUGE 0-10 BAR
In stock: 1201 pcs
RFQ

**MLH010BGB06B**
Manufacturers: Honeywell Sensing and Productivity Solutions
Description: MLH ALL METAL PRESS SENSE -ATF
In stock: 2917 pcs
RFQ

**MLH010BGB06E**
Manufacturers: Honeywell Sensing and Productivity Solutions
Description: SENSOR GAUGE 0-10 BAR
In stock: 870 pcs
RFQ

**Copyright © 2020 Reliable Distributor of Electronic Components**

E-mail: Info@infinity-electronic.com
Address: 17F, Gaylord Commercial Building, 114-118 Lockhart Road, Wan Chai, Hong Kong