Honeywell | Honeywell Sensing and Productivity Solutions

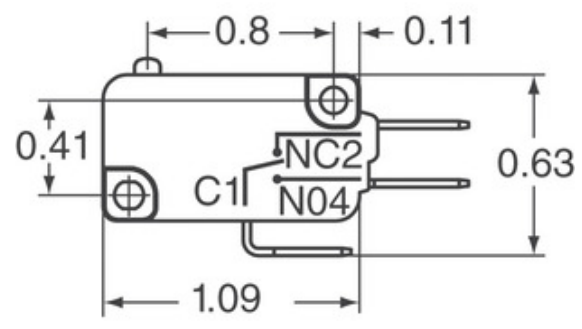

Image may be representation. See specifications for product details.

V15H22-CZ300A06-K

Part Number:	V15H22-CZ300A06-K
Manufacturer/Brand:	Honeywell Sensing and Productivity Solutions
Product description	SWITCH SNAP ACTION SPDT 22A 250V
Datasheets:	1.V15H22-CZ300A06-K.pdf 2.V15H22-CZ300A06-K.pdf
RoHs Status	Lead free / RoHS Compliant
Stock Condition	3014 pcs stock
Ship From	Hong Kong
Shipment Way	DHL/Fedex/TNT/UPS/EMS

REQUEST FOR QUOTATION

Specifications of V15H22-CZ300A06-K

PART NUMBER	V15H22-CZ300A06-K
MANUFACTURER	Honeywell Sensing and Productivity Solutions
DESCRIPTION	SWITCH SNAP ACTION SPDT 22A 250V
LEAD FREE STATUS / ROHS STATUS	Lead free / RoHS Compliant
QUANTITY AVAILABLE	3014 pcs
DATA SHEET	1.V15H22-CZ300A06-K.pdf 2.V15H22-CZ300A06-K.pdf
VOLTAGE RATING - AC	250V
TERMINATION STYLE	Quick Connect - 0.250" (6.3mm)
SWITCH FUNCTION	On-Mom
SERIES	V15
RELEASE FORCE	30gf
PRETRAVEL	0.125" (3.2mm)
PACKAGING	Bulk
OVERTRAVEL	0.051" (1.3mm)
OPERATING TEMPERATURE	-25°C ~ 150°C
OPERATING POSITION	0.812" (20.6mm)
OPERATING FORCE	180gf
MOUNTING TYPE	Chassis Mount
MOISTURE SENSITIVITY LEVEL (MSL)	1 (Unlimited)
MECHANICAL LIFE	5,000,000 Cycles
LEAD FREE STATUS / ROHS STATUS	Lead free / RoHS Compliant
INGRESS PROTECTION	-
FEATURES	-
ELECTRICAL LIFE	10,000 Cycles
DIFFERENTIAL TRAVEL	0.047" (1.2mm)
CURRENT RATING	22A (AC)
CIRCUIT	SPDT
ACTUATOR TYPE	Lever, Roller

Related Tags

Honeywell Sensing and Productivity Solutions V15H22-CZ300A06-K	V15H22-CZ300A06-K Distributor	V15H22-CZ300A06-K Supplier
V15H22-CZ300A06-K Price	V15H22-CZ300A06-K Pictures	V15H22-CZ300A06-K Image
V15H22-CZ300A06-K PDF Datasheet	V15H22-CZ300A06-K Download Datasheet	V15H22-CZ300A06-K Datasheet
V15H22-CZ300A06-K Stock	Buy V15H22-CZ300A06-K	Buy Honeywell Sensing and Productivity Solutions V15H22-CZ300A06-K
Honeywell Sensing and Productivity Solutions V15H22-CZ300A06-K	Honeywell Sensing and Productivity Solutions Supplier	Honeywell Sensing and Productivity Solutions Distributor
Honeywell Sensing and Productivity Solutions V15H22-CZ300A06-K	HONEYWELL V15H22-CZ300A06-K	Honeywell Sensing and Control EMEA V15H22-CZ300A06-K
Honeywell Sensing and Productivity Solutions T&M V15H22-CZ300A06-K		

Related Products

V15H22-CZ300-K
Manufacturers: Honeywell Sensing and Productivity Solutions
Description: SWITCH SNAP ACTION SPDT 22A 250V
In stock: 6354 pcs
RFQ

V15H22-CZ300A02-K
Manufacturers: Honeywell Sensing and Productivity Solutions
Description: SWITCH SNAP ACTION SPDT 22A 250V
In stock: 50194 pcs
RFQ

V15H22-CZ400B06-K
Manufacturers: Honeywell Sensing and Productivity Solutions
Description: SWITCH SNAP ACTION SPDT 22A 250V
In stock: 5699 pcs
RFQ

V15H22-CZ400-K
Manufacturers: Honeywell Sensing and Productivity Solutions
Description: SWITCH SNAP ACTION SPDT 22A 250V
In stock: 5717 pcs
RFQ

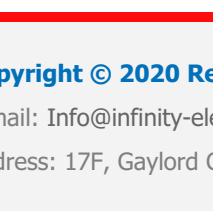

V15P10-M3/H
Manufacturers: Electro-Films (EFI) / Vishay
Description: DIODE SCHOTTKY 100V 15A TO277A
In stock: 279990 pcs
RFQ

V15P10HM3/H
Manufacturers: Electro-Films (EFI) / Vishay
Description: DIODE SCHOTTKY 100V 15A TO277A
In stock: 244171 pcs
RFQ

V15H22-CZ300A05-K
Manufacturers: Honeywell Sensing and Productivity Solutions
Description: SWITCH SNAP ACTION SPDT 22A 250V
In stock: 3671 pcs
RFQ

V15P10-M3/I
Manufacturers: Electro-Films (EFI) / Vishay
Description: DIODE SCHOTTKY 100V 15A TO277A
In stock: 321965 pcs
RFQ

V15H22-CZ300A03-K
Manufacturers: Honeywell Sensing and Productivity Solutions
Description: SWITCH SNAP ACTION SPDT 22A 250V
In stock: 5649 pcs
RFQ

V15P10HM3/I
Manufacturers: Electro-Films (EFI) / Vishay
Description: DIODE SCHOTTKY 100V 15A TO277A
In stock: 221337 pcs
RFQ

V15H22-CZ300A04
Manufacturers: Honeywell Sensing and Productivity Solutions
Description: BASIC SWITCH V BASICS V15
In stock: 7050 pcs
RFQ

V15H22-CZ200B04-K
Manufacturers: Honeywell Sensing and Productivity Solutions
Description: SWITCH SNAP ACTION SPDT 22A 250V
In stock: 5150 pcs
RFQ

Copyright © 2020 Reliable Distributor of Electronic Components

E-mail: Info@infinity-electronic.com
Address: 17F, Gaylord Commercial Building, 114-118 Lockhart Road, Wan Chai, Hong Kong