Honeywell | Honeywell Sensing and Productivity Solutions

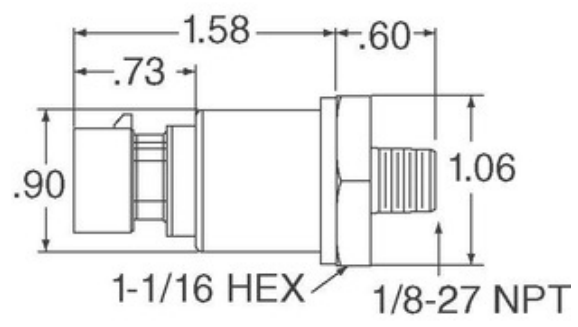

Image may be representation. See specifications for product details.

MLH07KPSB01D

Part Number:	MLH07KPSB01D
Manufacturer/Brand:	Honeywell Sensing and Productivity Solutions
Product description	SENSOR SEALED GAUGE 0-7000 PSI
Datasheets:	1.MLH07KPSB01D.pdf 2.MLH07KPSB01D.pdf
RoHs Status	Lead free / RoHS Compliant
Stock Condition	825 pcs stock
Ship From	Hong Kong
Shipment Way	DHL/Fedex/TNT/UPS/EMS

REQUEST FOR QUOTATION

Specifications of MLH07KPSB01D

PART NUMBER	MLH07KPSB01D
MANUFACTURER	Honeywell Sensing and Productivity Solutions
DESCRIPTION	SENSOR SEALED GAUGE 0-7000 PSI
LEAD FREE STATUS / ROHS STATUS	Lead free / RoHS Compliant
QUANTITY AVAILABLE	825 pcs
DATA SHEET	1.MLH07KPSB01D.pdf 2.MLH07KPSB01D.pdf
VOLTAGE - SUPPLY	14 V ~ 30 V
TERMINATION STYLE	Packard Metripak 150
SUPPLIER DEVICE PACKAGE	-
SERIES	MLH
PRESSURE TYPE	Sealed Gauge
PORT STYLE	Threaded
PORT SIZE	Male - 1/4" (6.35mm) NPT
PACKAGE / CASE	Cylinder, Metal
OUTPUT TYPE	Analog Voltage
OUTPUT	0.25 V ~ 10.25 V
OPERATING TEMPERATURE	-40°C ~ 125°C
OPERATING PRESSURE	7000 PSI (48263.3 kPa)
MOISTURE SENSITIVITY LEVEL (MSL)	1 (Unlimited)
MAXIMUM PRESSURE	10500 PSI (72394.95 kPa)
LEAD FREE STATUS / ROHS STATUS	Lead free / RoHS Compliant
FEATURES	Amplified Output, Temperature Compensated
DETAILED DESCRIPTION	Pressure Sensor 7000 PSI (48263.3 kPa) Sealed Gauge Male - 1/4" (6.35mm) NPT 0.25 V ~ 10.25 V Cylinder, Metal
ACCURACY	±0.25%

Related Tags

- Honeywell Sensing and Productivity Solutions MLH07KPSB01D
- MLH07KPSB01D Distributor
- MLH07KPSB01D Supplier
- MLH07KPSB01D Price
- MLH07KPSB01D Pictures
- MLH07KPSB01D Image
- MLH07KPSB01D PDF Datasheet
- MLH07KPSB01D Download Datasheet
- MLH07KPSB01D Datasheet
- MLH07KPSB01D Stock
- Buy MLH07KPSB01D
- Buy Honeywell Sensing and Productivity Solutions MLH07KPSB01D
- Honeywell Sensing and Productivity Solutions MLH07KPSB01D
- Honeywell Sensing and Productivity Solutions Supplier
- Honeywell Sensing and Productivity Solutions Distributor
- Honeywell Sensing and Productivity Solutions MLH07KPSB01D
- HONEYWELL MLH07KPSB01D
- Honeywell Sensing and Control EMEA MLH07KPSB01D
- Honeywell Sensing and Productivity Solutions T&M MLH07KPSB01D

Related Products

MLH060BSB09A
Manufacturers: Honeywell Sensing and Productivity Solutions
Description: SENSOR SEALED GAUGE 0-60 BAR
In stock: 4911 pcs
RFQ

MLH08KPSL12A
Manufacturers: Honeywell Sensing and Productivity Solutions
Description: MLH ALL METAL PRESS SENSE -ATF
In stock: 766 pcs
RFQ

MLH060BSD14B
Manufacturers: Honeywell Sensing and Productivity Solutions
Description: SENSOR SEALED GAUGE 0-60 BAR
In stock: 4763 pcs
RFQ

MLH060PGP06C
Manufacturers: Honeywell Sensing and Productivity Solutions
Description: SENSOR GAUGE 0-60 PSI
In stock: 3531 pcs
RFQ

MLH08KPSB01A
Manufacturers: Honeywell Sensing and Productivity Solutions
Description: SENSOR AMP 8000PSI .5-4.5VDC OUT
In stock: 863 pcs
RFQ

MLH08KPST03A
Manufacturers: Honeywell Sensing and Productivity Solutions
Description: MLH ALL METAL PRESS SENSE -ATF
In stock: 1122 pcs
RFQ

MLH06KPSB10A
Manufacturers: Honeywell Sensing and Productivity Solutions
Description: SENSOR SEALED GAUGE 0-6000 PSI
In stock: 6107 pcs
RFQ

MLH08KPSB01B
Manufacturers: Honeywell Sensing and Productivity Solutions
Description: SENSOR AMP 8000PSI 4-20MA OUT
In stock: 4752 pcs
RFQ

MLH060BSB01B
Manufacturers: Honeywell Sensing and Productivity Solutions
Description: SENSOR SEALED GAUGE 0-60 BAR
In stock: 1179 pcs
RFQ

MLH06KPST12E
Manufacturers: Honeywell Sensing and Productivity Solutions
Description: MLH ALL METAL PRESS SENSE -ATF
In stock: 905 pcs
RFQ

MLH08KPSH03A
Manufacturers: Honeywell Sensing and Productivity Solutions
Description: MLH ALL METAL PRESS SENSE -ATF
In stock: 1073 pcs
RFQ

MLH100BSB10A
Manufacturers: Honeywell Sensing and Productivity Solutions
Description: MLH ALL METAL PRESS SENSE -ATF
In stock: 959 pcs
RFQ

Copyright © 2020 Reliable Distributor of Electronic Components

E-mail: Info@infinity-electronic.com
Address: 17F, Gaylord Commercial Building, 114-118 Lockhart Road, Wan Chai, Hong Kong