THIS DRAWING IS UNPUBLISHED. RELEASED FOR PUBLICATION -,- .
© COPYRIGHT - By - ALL RIGHTS RESERVED.

LOC	DIST
FT	4

REVISIONS

P	LTR	DESCRIPTION	DATE	DWN	APVD
	A	NEW DRAWING PER ECO-12-018480	08NOV12	KH	MZ

1 THIS PART WILL ACCEPT FOUR (4) MULTIMATE PIN CONTACTS

2 HOUSING AND PRESSURE PLATE: NYLON, BLACK.
PERIPHERAL SEAL: ELASTOMER, GRAY.
WIRE ENTRY SEAL: ELASTOMER, RED-IRON OXIDE.

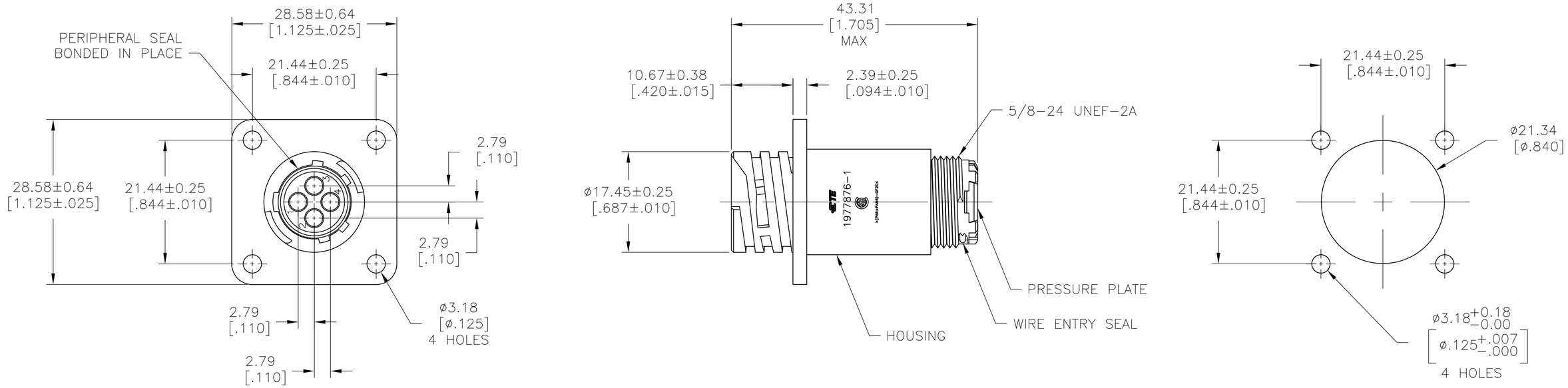

RECOMMENDED PANEL CUTOUT

1977876

1977876-1
PART NUMBER

THIS DRAWING IS A CONTROLLED DOCUMENT.

DIMENSIONS: mm [INCHES]

TOLERANCES UNLESS OTHERWISE SPECIFIED:

0 PLC	±	-
1 PLC	±	-
2 PLC	±	0.13 [.005]
3 PLC	±	-
4 PLC	±	-
ANGLES	±	-

MATERIAL: -

FINISH: -

DWN	KIRAN HOLAL	08NOV12
CHK	M ZITTO	08NOV12
APVD	M ZITTO	08NOV12
PRODUCT SPEC	—	
APPLICATION SPEC	—	
WEIGHT	—	

TE Connectivity

NAME: CPC SQUARE FLANGE RECEPTACLE ASSEMBLY, SERIES 1, SEALED,11-4, STANDARD SEX, UV RESISTANT

SIZE	CAGE CODE	DRAWING NO	RESTRICTED TO
A2	00779	C-1977876	—

CUSTOMER DRAWING | SCALE 2:1 | SHEET 1 OF 1 | REV A