THIS COPY IS PROVIDED ON A RESTRICTED BASIS AND IS NOT TO BE USED IN ANY WAY DETRIMENTAL TO THE INTERESTS OF PANDUIT CORP.

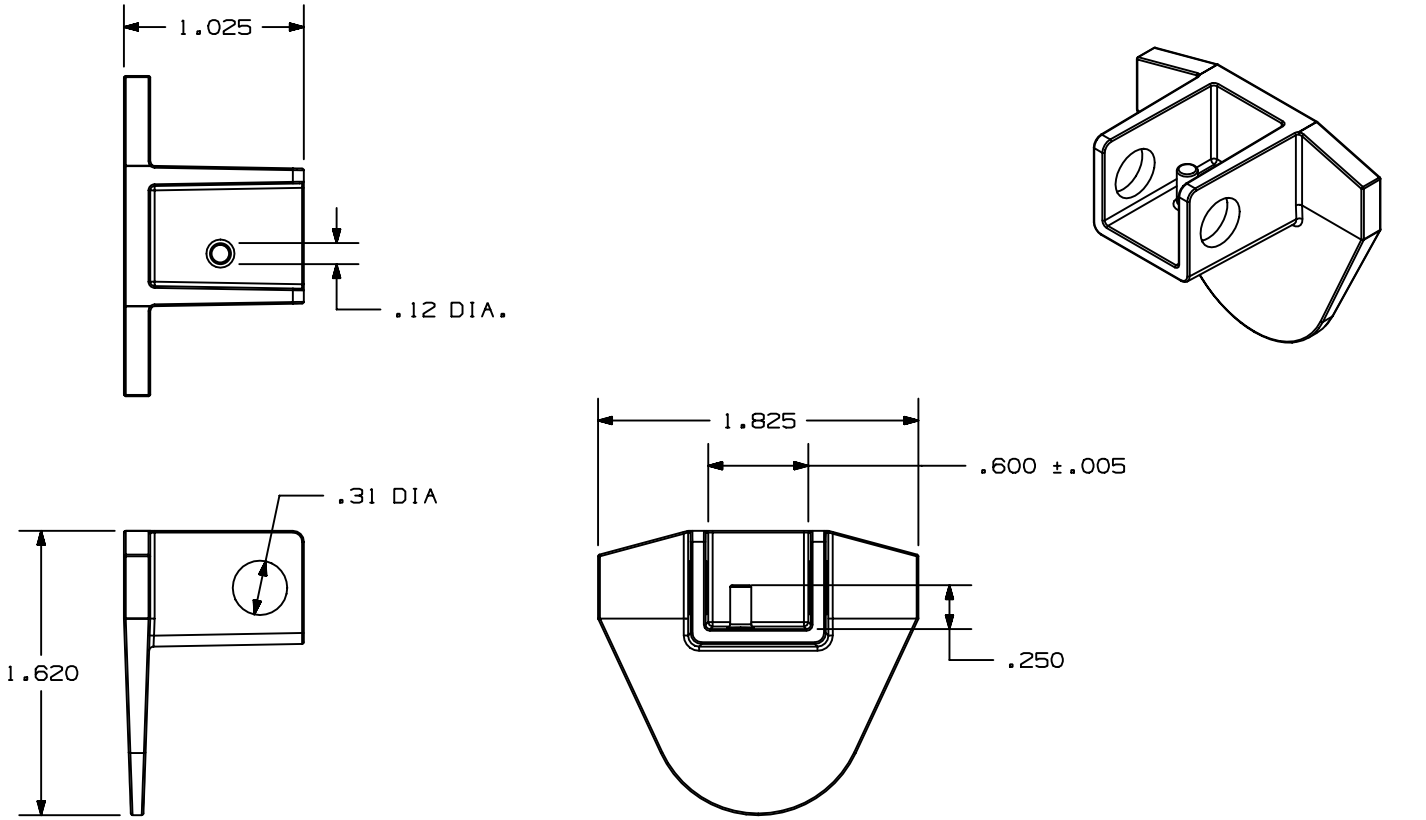

REV	DATE	BY	CHK	DESCRIPTION	ECN - R	CUST	SUP
R	10-8-03	RVU		DRAWING RELEASE	2965 R		

CAD FILENAME/LAYERS: I00619QC_C10083_PSL_00.prt

PANDUIT CORP. TINLEY PARK, ILLINOIS

PSL-P PLUG LOCKOUT
CUSTOMER DRAWING

UNLESS OTHERWISE SPECIFIED, DIMENSIONAL TOLERANCES ARE:
(.X) ± .1 (.XXX) ± .005
(.XX) ± .015 ANGLES ± 1 °

UNLESS OTHERWISE SPECIFIED, ALL DIMENSIONS ARE GIVEN IN INCHES, THIRD ANGLE PROJECTION.

DRAWN BY: RVU
DATE: 10-8-03
CHK'D:

MAT'L: RED POLYCARBONATE

SCALE: NTS

DRAWING NO.: C10083

DWG SIZE: A