THIS DOCUMENT IS THE PROPERTY OF KEYSTONE ELECTRONICS CORP. AND SHALL NOT BE REPRODUCED, DISTRIBUTED OR USED AS A BASIS FOR MANUFACTURE WITHOUT PRIOR WRITTEN PERMISSION FROM KEYSTONE ELECTRONICS CORP.

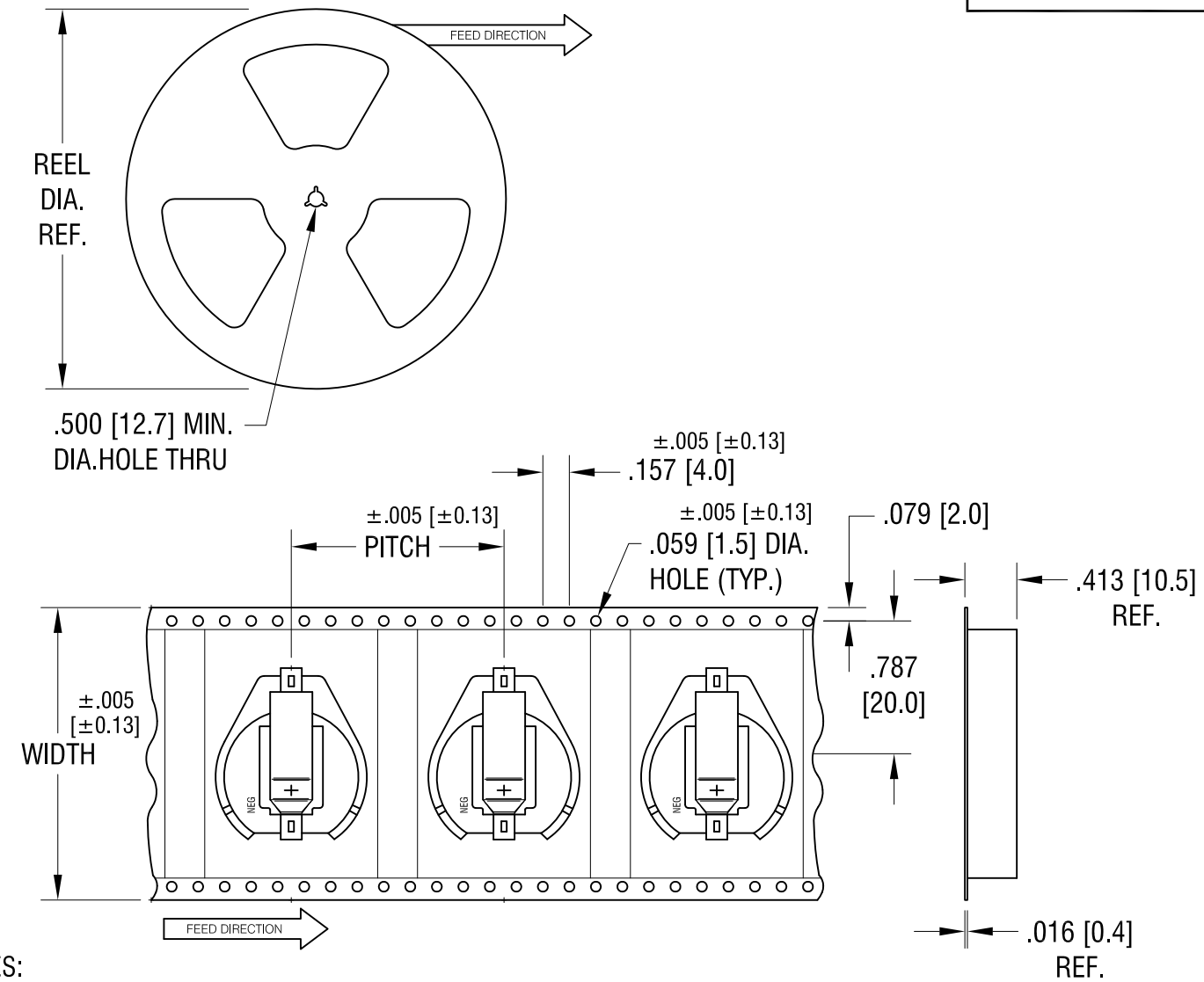

NOTES:

TAPE AND REEL SPECIFICATIONS:

1. TAPE:
   MAT'L - ALL CONDUCTIVE POLYSTYRENE CARRIER
   ANSI/EIA-481 STANDARD
   1.732 [44.0] WIDE; 1.260 [32.0] PITCH
2. REEL:
   13.0 [330.2] DIA. 200 PIECES OF
   PART NO. 1061 PER REEL.

DATE	DESCRIPTION	REV.
6.19.07	CHANGE AS PER ECN 07–037	A

KEYSTONE ELECTRONICS CORP.

www.keyelco.com • ASTORIA, N.Y. 11105-2017 • Tel (718) 956-8900

PART NAME	20mm SM COIN CELL HOLDER ON TAPE		
MATERIAL	AS NOTED		
FINISH	AS NOTED	DRN BY BOONE	DATE 2.28.00
		APP'D LN	SCALE X
TOLERANCES INCH [MM] DECIMAL ± .015 [± 0.38] ANGULAR ± 1° UNLESS OTHERWISE SPECIFIED	CODE C	DWG NO. 1061TR	