Part Number: 62202-9720

Status: Active

Description: Insertion Tool for 1 by 1 Small Form-Factor Pluggable

Documents:
RoHS Certificate of Compliance (PDF)

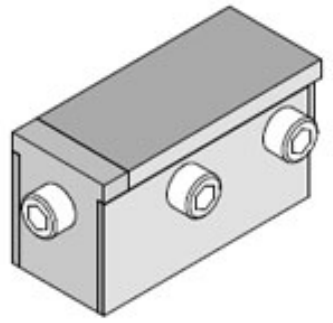

Series

image - Reference only

General

Product Family	Application Tooling
Series	T3002
Comments	See Tooling Specification (PDF) Above
Function	Insertion
Geographic Area	Global
Level of Automation	Manual
More Detailed Tech Information	applicationtooling@molex.com
Product Name	PremiumGrade™
Survey	www.molex.com//review/apptool_survey.html
Tool Type	Handtool
UPC	883906245603

Material Info

Reference - Drawing Numbers

Application Tooling Documents	ATS-622029720, TM-622022099

EU RoHS **China RoHS**
Compliance Status
Not Reviewed
REACH SVHC
Not Reviewed
Low-Halogen Status
Not Reviewed

Need more information on product environmental compliance?

Email productcompliance@molex.com
For a multiple part number RoHS Certificate of Compliance, click here

Please visit the Contact Us section for any non-product compliance questions.

Search Parts in this Series
T3002Series

Use With
SFP Plus (SFP+) Cage 74754

Application Tooling Description	| FAQ Product #
SFP Plus (SFP+) Cage, Single Port, Spring Finger Bezel Gasket, 3.05mm Press Fit Pins for PCI	0747540104